Olmedo Badía
www.olmedobadia.com
info@olmedobadia.com
Tel. 55-5557-0397

ISP Stitching & Bindery Products
A Division Of Samuel Strapping Systems

OWNERS MANUAL

MODEL
305
305-G

BinderyMate™

For Models With *M2000* Stitching Heads
Bindery Mate Serial Numbers
5161 and higher

CONTENTS

Section 1 INTRODUCTION

1. Model and Serial Number
2. Product Specifications

Section 2 SAFETY PRECAUTIONS AND PROCEDURES

4. Safety
4. Safety Guards/Cover

Section 3 ASSEMBLY, LUBRICATION, INSTALLATION

5. Before Unpacking
5. After Unpacking
5. Assembly
6. Threading wire and adjusting wire straightners
7. Lubrication-Felt Pads
8. Lubrication-Stitcher Head
9. External Lubrication
10. Internal Lubrication

Section 4 OPERATION

11. General Stitching
11. Table/Saddle Conversion
11. Table Stitching Using Work Trip
11. Table Stitching Using Foot Trip
11. Stitch Repeat
11. Hand Jog
12. Master and Secondary
12. Saddle Stitching-Foot Switch Only
12. Work Guides:
    Side Guides
    Corner Stitch Guides
12. Changing Work Thickness

USE REPLACEMENT PARTS DESIGNED AND MANUFACTURED ONLY BY INTERLAKE SPECIFICALLY FOR YOUR M2000 STITCHER

Section 5 MAINTENANCE, TROUBLE SHOOTING AND ADJUSTMENT

13. General
13. Recommended Spare Parts
13. Cleaning and oiling
13. Stitching Adjustments
13. To Equalize Both Legs of Stitch
14. Trouble Shooting-M2000 Head
17. Trouble Shooting-Drive
20. Insufficient or Excessive Compression
20. Table/Clincher Bracket Adjustment
20. Clincher
21. Clincher Point Height Adjustment
21. Reversing or Replacing Clincher Points
22. Head/Clincher Alignment
22. Bender bar
22. Bender bar Friction Plug
23. Driver Bar
24. Bender Bar Latch
24. Grip, Grip Release Slide and Faceplate
25. Wire Cutters
26. Wire cutter Operating Slide
26. Proper Wire
26. Rotator
27. Wire Straighteners
28. Supporter
28. Tension Pawl
28. Work Trip
29. Stitcher Head Disassembly
31. Drive/Frame Disassembly

Section 6 PARTS LIST

35. Drive/Frame
40. M2000 Head Stitcher

Section 7 ELECTRICAL

42. Electrical Schematic (115 V.A.C.)
43. Electrical Schematic (230 V.A.C.)

OB olmedo badía

Olmedo Badía
www.olmedobadia.com
info@olmedobadia.com
Tel. 55-5557-0397

Section 1

INTRODUCTION

Here are the instructions on
how to install
operate, maintain, and make
repairs on your

MODEL 305, 305-G BINDERY MATE

Bindery Mate Serial Number_____
Bindery Mate's M2000 Head Stitcher Serial Number_____

When ordering parts or requesting information, please state: Quantity required, part number, part name, model and serial number of your stitcher.

Your stitcher with the M2000 Stitching Head has been engineered and developed to provide you with the finest equipment available for your stitching needs. With proper care and maintenance it will give you years of satisfactory efficient service. This manual shows you how to get top performance from your stitcher and is divided into 7 major sections.

Read the Bindery Mate Manual throughly. Study it carefully. Best stitching performance will be assured, if all the adjustments are made as instructed, so that you get the following desired results.

1. Good Cut-Off
2. Uniform wire draw
3. Equal leg length
4. Proper clincher alignment
5. Sufficient compression

Olmedo Badía
www.olmedobadia.com
info@olmedobadia.com
Tel. 55-5557-0397

BINDERY MATE

PRODUCT SPECIFICATIONS

Unit Weight:	Overall:	30 Lbs.	
	Without Wire Spool:	25 Lbs.	
Unit Envelope Size:	Height	Length	Width
Overall:	27"	15"	10"
Without Tables and Wire Guide:	22"	12 1/2"	4"

Wire (Interlake 417-0025)	
Wire Material:	120,000 to 150,000 p.s.i. tensile strength tinned steel wire
Wire Size:	25 Gauge (.020" Diameter)
Wire Spool Weight:	5 Lb. Spool (Fully Loaded Wire)
Stitching Speed	173 stitches per minute, full load capacity. 199 stitches per minute, minimum load capacity.
Stitching Capacity (20 Lb. Bond Paper)	
Minimum Stitching thickness adjustment	.94" Wire Draw, Approx. 57,000 stitches per 5 Lb. coil.
Maximum Stitching thickness adjustment	1.24" Wire Draw, Approx. 43,000 stitches per 5 Lb. Coil.
Maximum Stitching thickness:	1/4"
Stitcher:	M2000 Head CTTT-2605-T3 (Equipped with faceplate adjustment lever)
Table (Flip-Up)/Saddle (Flip-Down)	
Length:	10"
Width:	4 3/4"

Side Guides: Pop-Up/Pop Down pins in arms which adjust from 7/8" to 9 5/8" from center of clincher.

Corner Guides: Pop-Up/Pop Down pins in table for 45 degrees corner stitch.

Olmedo Badía
www.olmedobadia.com
info@olmedobadia.com
Tel. 55-5557-0397

BINDERY MATE

PRODUCT SPECIFICATIONS

Auxiliary Rear Table (For flat work support when deep throat table stitching)

Length:	10"
Width:	3"

Throat Depth:	4" Max.

Stitch Modes:

Work Trip (For Table Mode):	Plug foot switch into rear of housing.
Foot Trip (For Saddle or Table Mode):	Manual Switch Control.
Master-Secondary (For use with multiple stacked unit):	Plug master into 2nd-3rd units for side by side multiple stitch (4 1/2 in. min. centers).

Quick adjust for 3/16" to 4" throat depth.

Jog:	Push in and turn knob, on rear of housing, for manual forward or reverse operation.

Electrical

Input:	115 V.A.C. 60 HZ (Model 305)	230 V.A.C. 50 HZ (Model 305-G)
Control Circuit:	12 V.D.C.	12 V.D.C.
Motor:	1/20 HP, 90 V.D.C.	1/20 HP, 180 V.D.C.
Circuit Breakers:	1 AMP for 115 V.A.C. Input	1/2 AMP for 230 V.A.C. Input

Mounting:

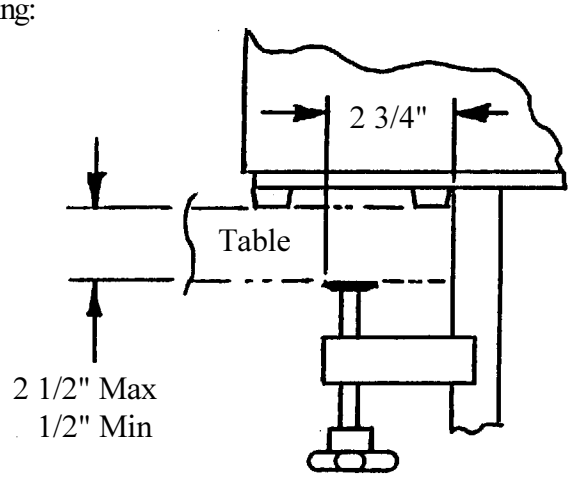

Olmedo Badía
www.olmedobadia.com
info@olmedobadia.com
Tel. 55-5557-0397

Section 2

SAFETY PRECAUTIONS AND PROCESURES

SAFETY

1. Make sure electrical power is turned off before performing any adjustment or maintainence.
2. Keep hand, tools, hair, and clothing clear of stitching area.
3. Become familiar with the moving components of your machine. Keep fingers away from areas that could pinch or cut.
4. Observe your plant safety rules.
5. Exert "good housekeeping" in your work area. Keep it as clean and uncluttered as possible.
6. A well maintained machine is a safer machine. Clean and lubricate the machine at regular intervals. Check machine daily for broken or worn parts. Replace as necessary. DO NOT attempt to operate the machine if a part is broken.
7. Route all electrical cables away from pedestrian transportation lanes.
8. See "Safety Guards/Cover" information. It points out areas where additional caution should be exercised. If you are unsure how to safely operate or maintain your Stitcher, contact your Service Representative.

ATTENTION

LE CIRCUIT D'ALIMENTATION DESTINE A UNE UNITE DE LA SERIE 305/306 DOIT COMPORTER UN FUSIBLE OU UNE PROTECTION THERMIQUE CALIBREE A <u>15 AMP MAXIMUM</u>. LA CAPACITE DE COURT CIRCUIT DU RESEAU NE PEUT PAS DEPASSER 2000 AMPS.

CAUTION

THE SUPPLY CIRCUIT FOR ANY 305/306 SERIES UNIT MUST USE A <u>15 AMP MAXIMUM FUSE OR CIRCUIT BREAKER</u>. THE SHORT CIRCUIT CAPACITY OF THE SUPPLY CIRCUIT MUST NOT EXCEED 2000 AMPS.

SAFETY GUARDS/COVER

A. Grey Plastic Cover: Covers frame, motor, mechanical, and electrical components.

B. Front, Clear Plastic, Guard Assembly: A three position guard. In the fully downward position the guard is spring loaded to: cover the M2000 Head, and work trip adjustment knob; restrict access to the stitching area; depress a limit switch to allow the machine to operate. The guard can be swung up to its first detent position (about 70 deg.) to allow access to the work trip adjustment knob and lower portion of the M2000 Head. The guard is swung up to its second detent position (about 155 deg.) to allow total access to the M2000 Head for faceplate adjustment, lubrication, and wire threading.

DANGER

KEEP HANDS CLEAR OF STITCHING AREA

CAUTION

FOR YOUR SAFETY, MAKE SURE ALL COVERS ARE PROPERLY IN PLACE BEFORE OPERATING MACHINE

CAUTION

Do not operate stitcher until operating have been read and understood- ate stitcher at anytime without the head.

OB olmedo badía
Olmedo Badía
www.olmedobadia.com
info@olmedobadia.com
Tel. 55-5557-0397

Section 3

ASSEMBLY, LUBRICATION INSTALLATION

Note:

These instructions must be followed to insure proper installation, efficient operation and the prevention of serious damage to your stitcher.

Before Unpacking:

Examine the outside of the crate or carton for any visible damage. If damaged DO NOT UNPACK THE STITCHER. Notify the carrier who delivered the stitcher.

After Unpacking:

Examine your stitcher carefully for any damage in transit. If damaged, DO NOT INSTALL THE STITCHER. Notify your nearest representative and the carrier who delivered your stitcher.

Make certain that you get a signed copy of the Carrier Inspector's Report of the damage incurred

ASSEMBLY (FIGURES 1,2,3)

1. Clamp the Bindery Mate to a table or bench (see "Mounting" page 3). Assemble per figure 1.
2. Install Table/Saddle (Index A) to Table and Clincher Bracket (Index B) using the two shoulder screws (Index C). Shoulder of screws should extend through table and bottom out inside of table/clincher bracket.
3. Turn Trip lever Knob (Index D) counter clockwise and move the work trip (Index E) all the way toward the clincher (Index F). Install the Auxiliary Table (Index G) and Paper Guide (Index K) to the stand using the two .25-28 x .375 socket head cap screws and flat washers (Index H,I). The top surface of the auxiliary table should be at the same height as the main table. **NOTE: The auxiliary table MUST NEVER TOUCH THE WORK TRIP OR STITCHER WILL ACTIVATE (SEE FIGURE 3).**
4. Install Wire Guide Spring into wire guide bracket of M2000 Head.

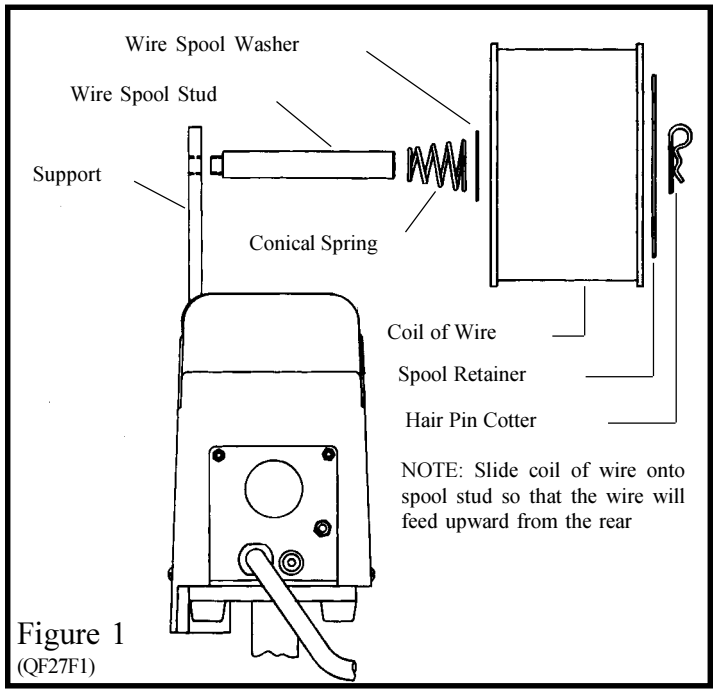

Figure 1
(QF27F1)

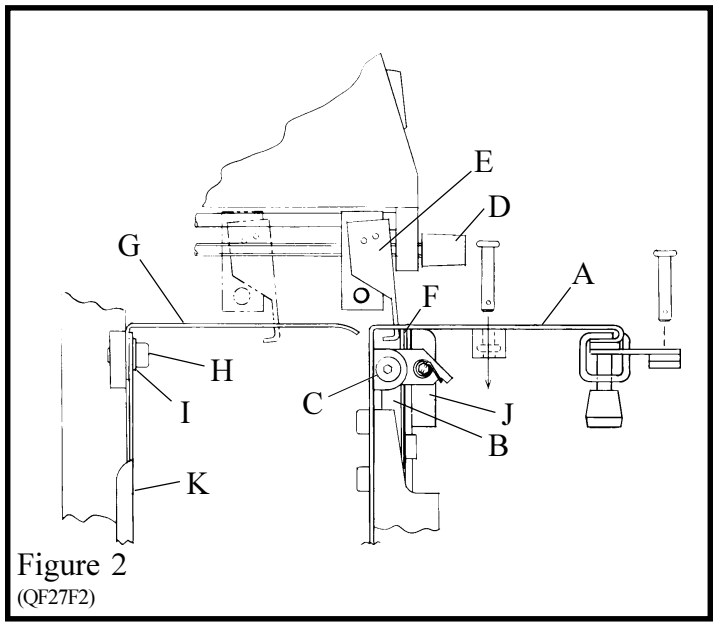

Figure 2
(QF27F2)

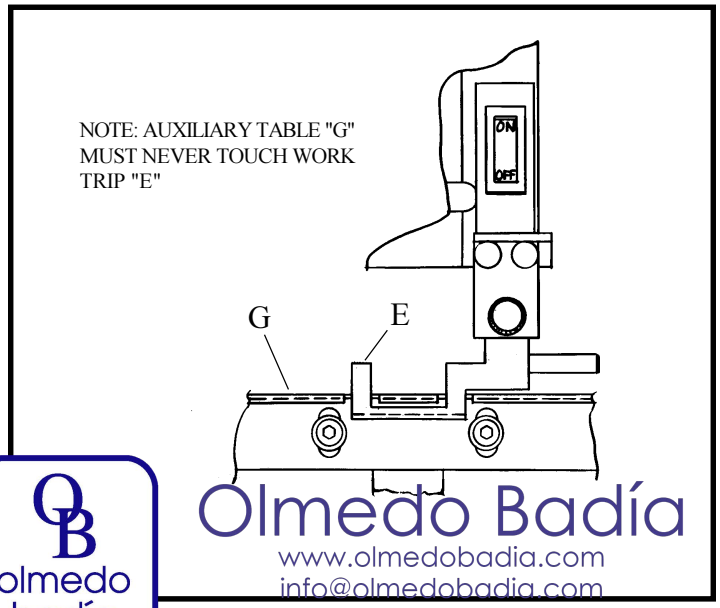

OB olmedo badía
Olmedo Badía
www.olmedobadia.com
info@olmedobadia.com
Tel. 55-5557-0397

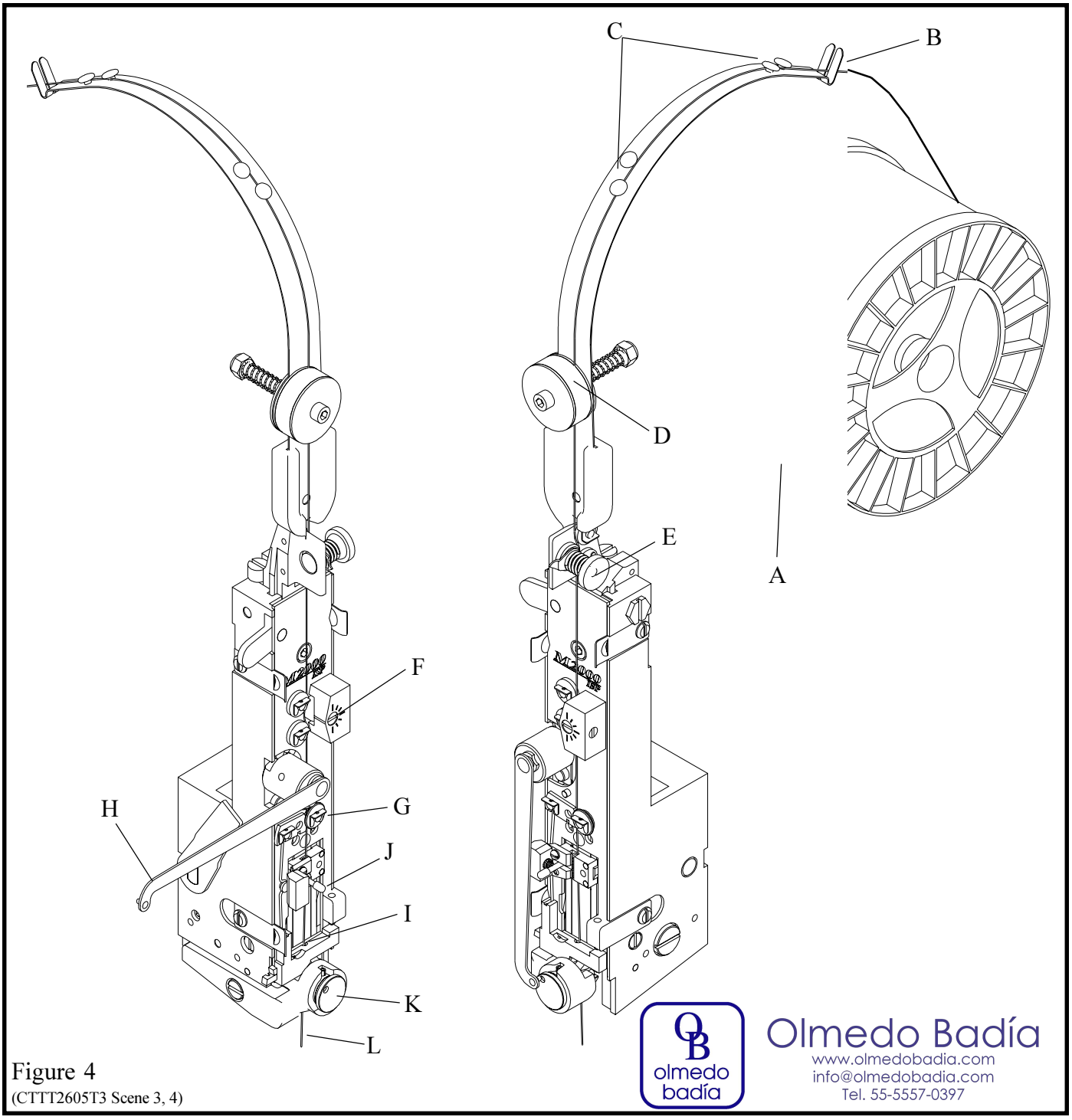

Figure 4
(CTTT2605T3 Scene 3, 4)

THREADING WIRE AND ADJUSTING WIRE STRAIGHTENERS (See fig. 4)

1. Draw wire by hand, from the the coil (Index A).
2. Thread the wire through the slot (Index B) at the end of the wire guide spring, through the wire guides (Index C), between the thin and thick felt wire wipes (Index D), through the upper wire straightener (Index E), and through the lower wire straightener (Index F).
3. Release the rotator operating spring (Index H) from the rotator and swing it to the left. Remove Rotator (Index K).
4. Thread the wire between the tension pawl and tension roll (Index G). Feed the wire through the wire cutter lead-in hole (Index I) in the bottom of the face plate.
5. Push grip post to left to open the grip (Index J). Insert wire and release the post so that the grip engages the wire for feeding into the rotator.

6. To check adjustment, hold open grip (Index J and pull about 1 1\2 feet of wire from below face plate. Cycle machine once by hand to cut wire. Cycle machine again by hand to observe wire straightness. The wire (Index L) should point straight down, prior to being cut, as shown in Figure 4 .
7. Adjust the upper wire straightener, beginning at position shown, (Index E, Figure 4) so that the wire points straight down. Adjust the lower wire straightener, beginning at the 3:00 o'clock position, (Index F, Figures 4) so that the wire (Index L, Figure 4) feeds straight down.
8. Replace the rotator and rotator operating spring.

NOTE:

When changing coils or wire sizes, check straightners to insure proper wire feed.

FELT WIPE PADS LUBRICATION AND MAINTAINANCE: (FIGURE 5)

IMPORTANT! In order for the stitchers to operate properly, the felt wire wipes **MUST** be rotated and dampened with SAE 20W oil before each new spool of wire (50,000 to 70,000 stitches). Replace felt pads when they become so dirty that they cannot be rotated to a clean spot.

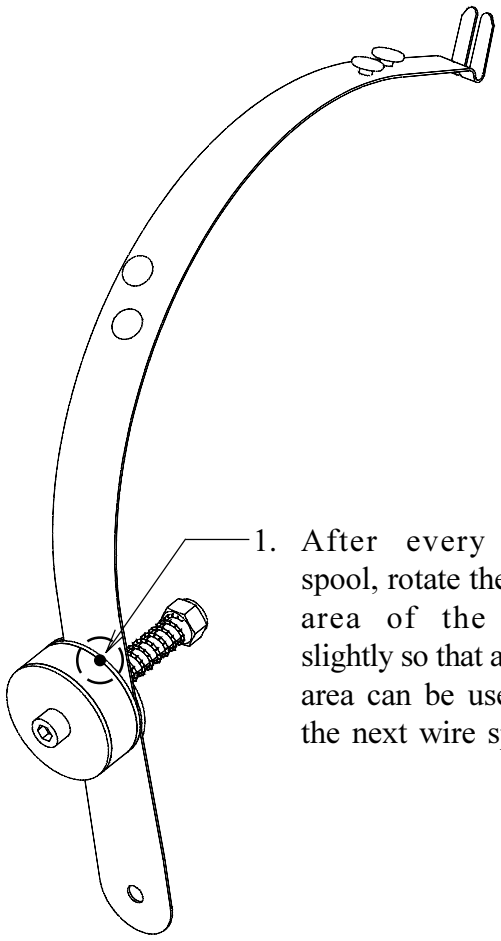

1. After every wire spool, rotate the dirty area of the pads slightly so that a clean area can be used for the next wire spool.

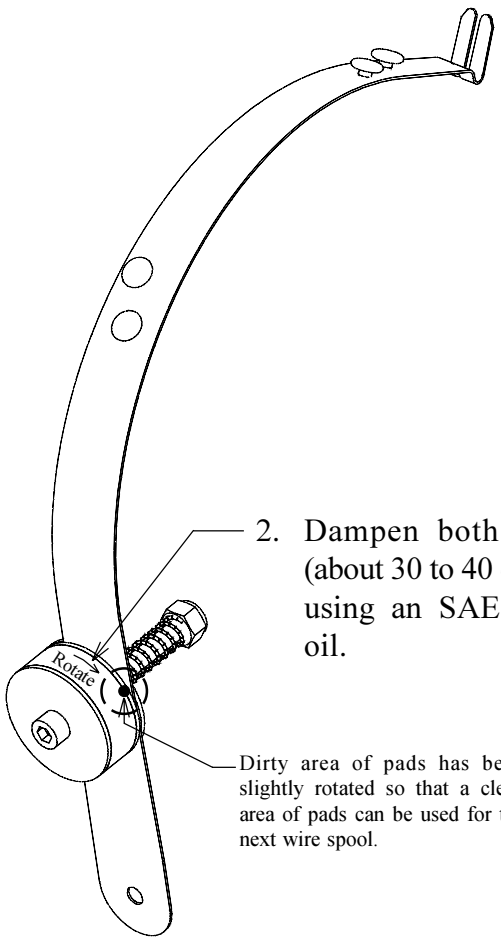

2. Dampen both pads (about 30 to 40 drops) using an SAE 20W oil.

Dirty area of pads has been slightly rotated so that a clean area of pads can be used for the next wire spool.

Figure 5
(CTTT2605T3 Scene 5)

OB olmedo badía
Olmedo Badía
www.olmedobadia.com
info@olmedobadia.com
Tel. 55-5557-0397

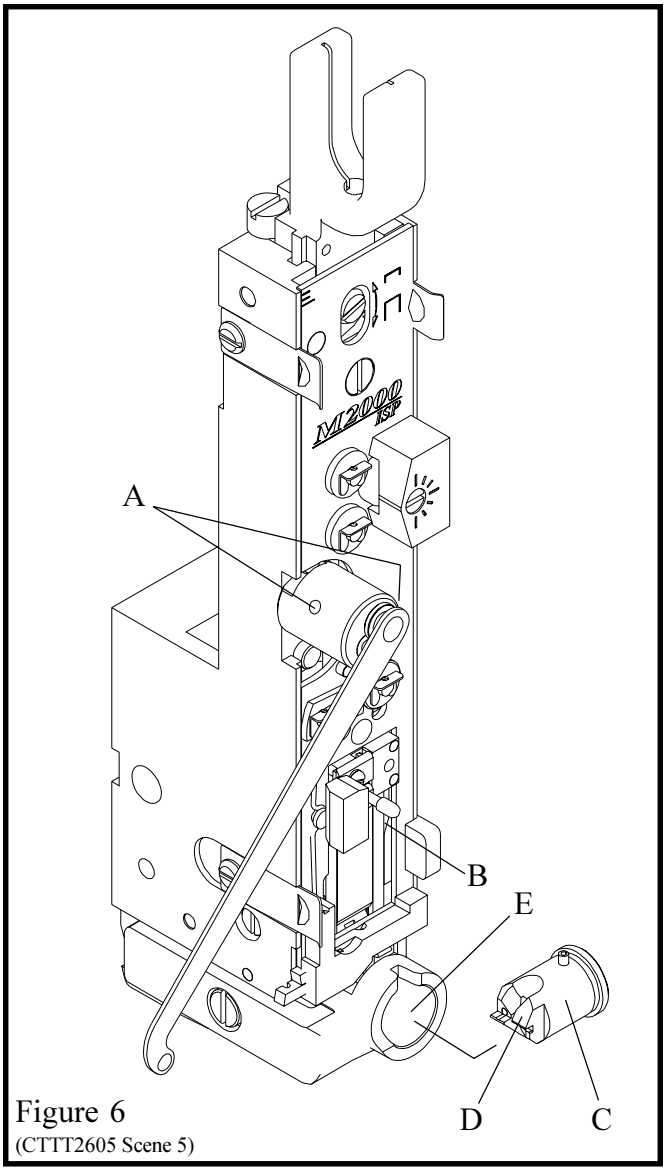

Figure 6
(CTTT2605 Scene 5)

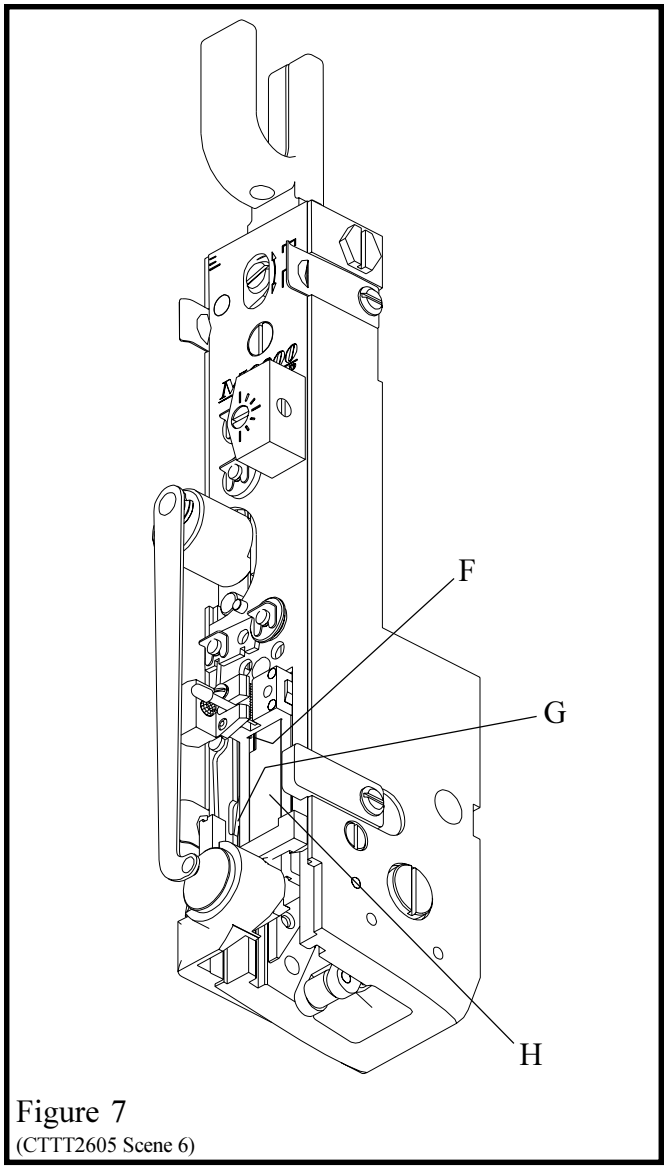

Figure 7
(CTTT2605 Scene 6)

STITCHING HEAD LUBRICATION: (FIGURES 6 & 7)

Typically, the 1/2 inch crown stitcher will run for 1,000,000 cycles without additional lubrication. However, the following procedure used after each spool of wire will assure optimum life and performance. Use **ISP** lubricant #CA9640.

A. Inject lube into hole, or remove and lube shafts.
B. Wipe area clean and inject a small amount of lube into cam area.
C. Remove rotator, wipe rotator clean and lube rotator body.
D. Apply lube to rotator ramp.
E. Wipe clean inside of rotator holder.
F. Inject a small amount of lube into cam area of driver bar.
G. Inject lube into cutter operating slide.
H. Wipe driver clean, and apply a light coating of lube.

After prolonged use (or storage) accumulations of wire dust, dirt, or other contaminants can mix with the stitcher lubricant. This will reduce the lubricant's effectiveness. The following procedure is recommended every 1,000,000 cycles.

1. Disassemble the head and clean all parts.
2. Lightly lube all sliding surfaces using **ISP** lubricant #CA9640.
3. Double check lube points A through H.

OB olmedo badía
Olmedo Badía
www.olmedobadia.com
info@olmedobadia.com
Tel. 55-5557-0397

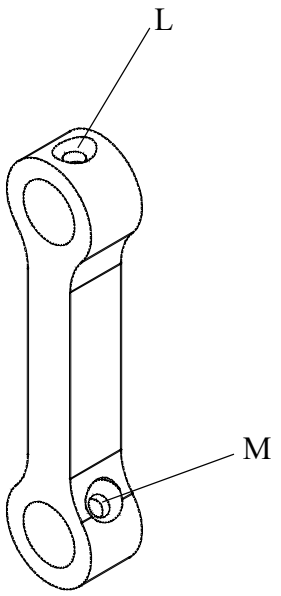

Figure 8
(CA44 Layout 2)

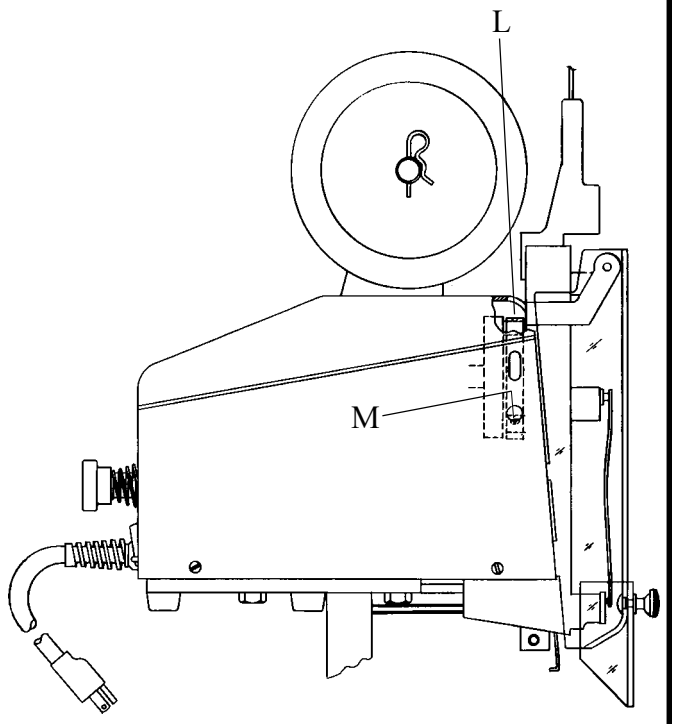

Figure 9
(QF27F4)

EXTERNAL LUBRICATION: (FIGURES 8, 9, 10)

Lubricate the following points before each spool of wire using SAE 20 oil.

L. One drop in top hole of head operating link. Access through slot at top of cover behind stitcher head.

M. One drop in lower/side hole of head operating link. Access through round hole (while viewing through slot immediately above round hole) in side of cover.

N. One drop on clincher slide.

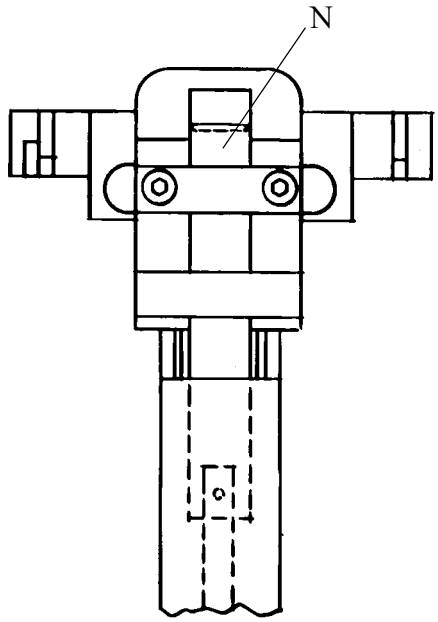

OB
olmedo badía
Olmedo Badía
www.olmedobadia.com
info@olmedobadia.com
Tel. 55-5557-0397

INTERNAL LUBRICATION (FIGURES 11, 12)

Frequency of Lubrication: Every 500,000 stitches or once a year, which ever comes first.
Unplug power cord, remove grey plastic cover and apply oil as follows:

O. Two drops to pivot point of clincher operating lever.
P. One drop between cam and clincher operating lever.
Q. One drop on roll pin.
R. One drop on each clincher rocker lever roll

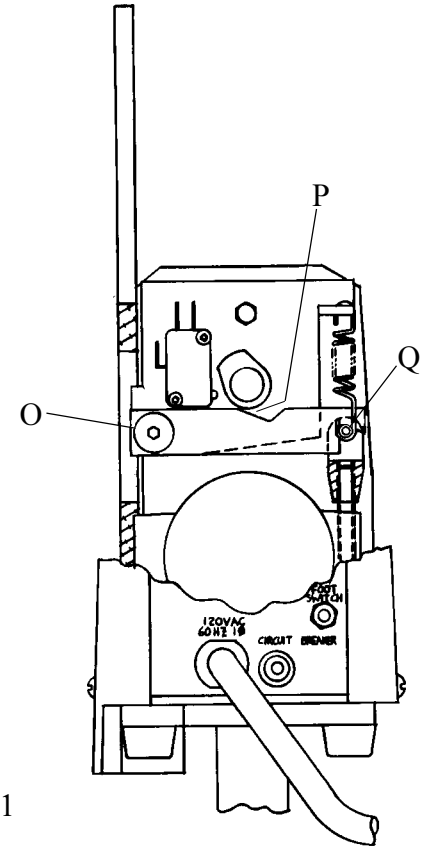

Figure 11
(QF27F6)

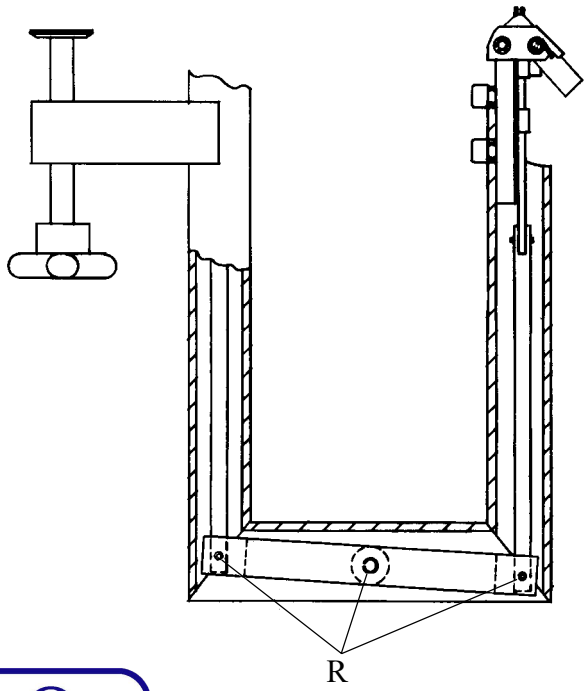

OB olmedo badía
Olmedo Badía
www.olmedobadia.com
info@olmedobadia.com
Tel. 55-5557-0397

Section 4

OPERATION

General:

After having properly installed and set up the machine, it is now ready for stitching. It is recommended that each operator be instructed as to correct operating procedure and normal adjustments necessary for varying work conditions.

WARNING

Prevent accidents by following these rules:

1. **Do not put your hands near area to be stitched when machine is operating.**
2. **Turn the power off when the stitcher is not in use.**

Table/Saddle Conversion:

To convert from saddle to table fully raise front sliding guard (Index 118, page 37), swing up front of saddle until the two spring loaded table braces (Index J, Fig.2) flip up to keep the table from swinging back down.
To convert from table to saddle gently lift the front of the table, pull forward at the bottom of one of the table braces until the table can be gently swung down to saddle position. Fully lower front sliding guard (Index 118, page 37).

Table Stitching Using the Work Trip:

Position table/saddle for table stitching. Switch off power. Swing up front guard assembly. Turn the trip lever knob counter clockwise and position the work trip to achieve the desired stitch location. Swing down the front guard assembly. Switch power on. Insert work, from the front, into the stitching area until the work depresses the work trip, causing stitch.

Table Stitching Using the Foot switch:

Switch off power. Swing up front guard assembly. Position table/saddle for saddle stitching. Turn the trip lever knob counter clockwise and position the work trip to serve as a back gauge or move work trip completely back out of the way of the work. Plug the foot switch cord into foot switch outlet on rear control panel (work trip is then automatically bypassed). Switch power on. Load work, from the front, into the stitching area. Once the work is positioned as desired step on foot switch to cause a stitch.

Hand Jog:

A hand jog is located at the rear of the machine. To manually cycle the Bindery Mate: switch off power; push in and rotate knob counter clockwise to go through a normal stitch cycle, or clockwise for a reverse cycle.

OB olmedo badía
Olmedo Badía
www.olmedobadia.com
info@olmedobadia.com
Tel. 55-5557-0397

Master Out and SecondaryUnit In:

These outlets are only for use with the "Multiple Stitch Accessories".

Saddle Stitching-Foot Switch Use Only:

Switch off power. Swing up front guard assembly. Turn the trip lever knob counter clockwise, and move the work trip all the way back. Position the table/saddle for saddle stitching. Swing down the front guard assembly. Slightly loosen the two knobs (counter clockwise) securing the front sliding guard to the front guard. Allow the front sliding guard to drop to the saddle position. Retighten the two knobs. Plug the foot switch cord into foot switch outlet on rear control panel (work trip is then automatically passed). Switch power on. Load work from either side and step on foot switch to cause a stitch.

CAUTION

AVOID DAMAGE TO YOUR STITCHER BY FOLLOWING THESE RULES:

1. **Never operate your stitcher with wire feeding unless you have work material between the clinchers and benderbar.**
2. **Do not drive one stitch on top of another.**

Work Guides:

A. Side Guides: To adjust side guides pop-up the pins at the end of each guide, loosen the screw knob beneath the table, position guides as desired, and retighten the screw knob.

B. Corner Stitch Guides-Table Use Only: Pop Up the pins located in the table and the pins located at the end of each side guide. Using your work as a set up tool, position and secure the side guides as indicated in figure 13. Switch off power, swing upfront guard assembly, and move the work trip all the way forward. Swing front guard assembly back down and switch on power. Push work into corner guided area of table until depression of work trip causes a stitch.

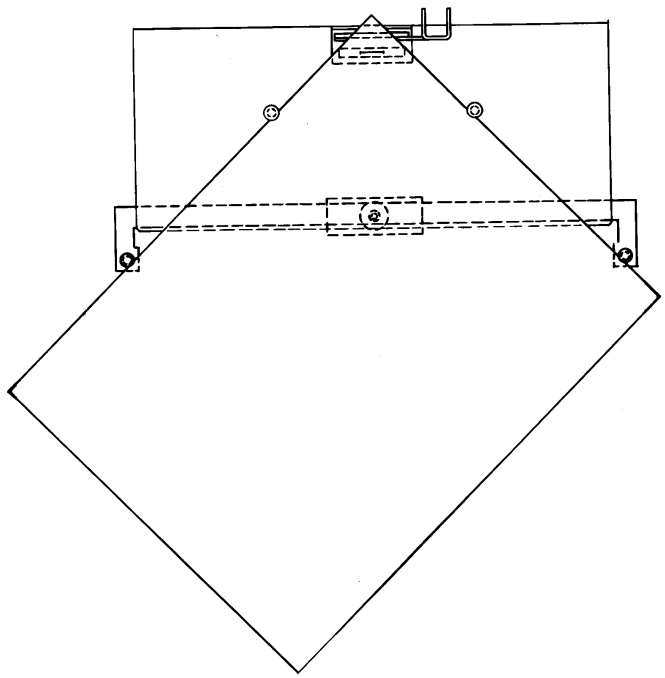

Figure 13
(QF27F8)

Changing Work Thickness:

Changing work thichness will probably require a change of the wire draw length used to make a stitch. This is done by raising or lowering the face plate. To change face plate position switch off power; swing front guard assembly up to the second detente position; loosen the faceplate screw (Located directly above “M2000” on the face plate), move the position lever up for more wire or down for less wire, retighten faceplate screw, and swing down front guard.

OB olmedo badía
Olmedo Badía
www.olmedobadia.com
info@olmedobadia.com
Tel. 55-5557-0397

Section 5

MAINTENANCE, TROUBLE SHOOTING AND ADJUSTMENTS

General

Every Bindery Mate's M2000 Head Stitcher has a friction-type head which depends on smooth sliding friction and proper timing to function correctly. Preventative maintenance will go far to insure trouble-free operation. Avoid production down time by keeping your stitcher in top working condition at all times.

Recommended Spare Parts

Like any equipment that has moving parts, certain parts of your stitcher will be subjected to more wear than others and require replacement. The following listing includes all the parts required for minimum maintenance and good operation of your Bindery Mate.

PART NAME	PART NO.	QTY.
Wire Cutters	CA9048	2
Grip	CA9015D	1
Grip Spring	CA168	1
Tension Roll Clip	CA9124	2
Rotator	CAA9038E	1
Clincher Points	CA9083	2

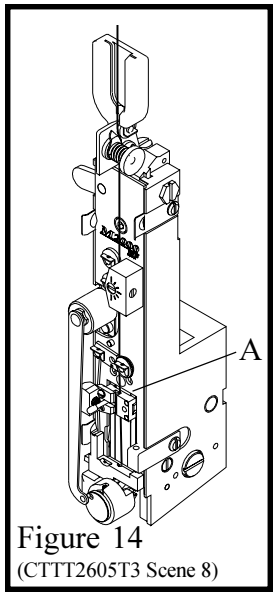

Figure 14
(CTTT2605T3 Scene 8)

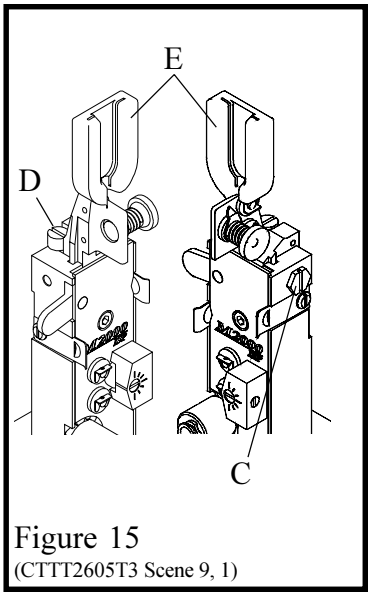

Figure 15
(CTTT2605T3 Scene 9, 1)

Caution

MAKE ALL ADJUSTMENTS WITH THE POWER OFF AND THE STITCHING HEAD IN NEUTRAL POSITION! (Fig. 14)

In neutral position, the wire grip assembly (Index A) is stopped at the top of the slot in the face plate.

Stitching Adjustments

Best stitching performance will be assured if all adjustments are made so that you get the following results:

1. Good Cut-Off
2. Uniform Wire Draw
3. Equal Leg Length
4. Proper Clincher Alignment
5. Sufficient Compression

To Equalize Both Legs of Stitch (Fig. 15)

1. Loosen the wire guide locking bolt (Index C).
2. Turn adjusting screw (Index D) clockwise to shorten left leg of stitch; counter clockwise to lenghten left leg.
3. Tap bracket (Index E) down before tightening bolt (Index C).

M2000 Head Trouble Shooting

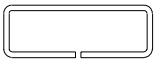

HERE'S HOW A PERFECT STITCH LOOKS

Should stitches appear in any form other than illustrated, one or more kinds of mechanical trouble may have caused the malformation. The possible causes and remedies are given for each kind of mechanical trouble and are listed under each section. The remedies are indexed to the Adjustments Section which gives more detailed information about your stitcher, the mechanical trouble that may occur and suggested remedies. Unless you recognize the correct cause, check each possible cause given.

TROUBLE	POSSIBLE CAUSE	REMEDY
A. Defective Stitches		
1. One or both legs buckled. NOTE: Since buckled legs are often concealed in the work and may appear the same as a short leg, always remove two or more stitches to see which is occurring. 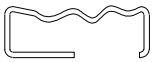 2. Wrinkled crown.	1. Clincher is worn or improperly aligned. 2. Insufficient compression. 3. Unequal leg length 4. Burred stitch leg. 5. Incorrect wire size. 6. Worn bender bar.	"C,F" Page 20,22 "A,B" Page 20 See "To Equalize Both Legs of Stitch" Page 13 "L" Page 25 "N" Page 26 "G" Page 22
3. Length of one leg varies	1. Leg Lengths not adjusted properly 2. Gripper is worn or dirty 3. Grip release slide is worn 4. Broken wire guide spring (index 65H) 5. Excessive tension on wire straightner 6. Worn Driver bar 7. Worn Tension Pawl or weak tension pawl spring 8. Weak or broken grip spring	See "To Equalize Both Legs of Stitch" Page 13 "K" Page 24 "K" Page 24 Page 40 "P" Page 27 "I" Page 23 "R" Page 28 "K" Page 24

OB olmedo badía
Olmedo Badía
www.olmedobadia.com
info@olmedobadia.com
Tel. 55-5557-0397

M2000 Head Trouble Shooting

TROUBLE	POSSIBLE CAUSE	REMEDY
4. Corner of crown distorted or fractured	1. Excessive compression 2. Broken driver bar end 3. Worn bender bar 4. Clincher improperly aligned or worn 5. Incorrect wire size	"A,B" Page 20 "I" Page 23 "G" Page 22 "C,F" Page 20,22 "N" Page 26
5. Stitch crown not flat and legs not bent into work	1. Insufficient compression	"A,B" Page 20
6. One or both legs turn out	1. Clincher improperly aligned 2. Dull cutters	"F" Page 22 "L" Page 25
7. Flat piece of wire	1. Rotator is dirty 2. Improperly adjusted lower wire straightener 3. Broken or worn rotator 4. Improperly aligned rotator	"O" Page 26,27 "P" Page 27 "O" Page 26,27 "O" page 26,27
8. Stitches come out in pieces	1. Improperly aligned rotator 2. Weak rotator operating spring 3. Improperly adjusted upper wire straightener 4. Incorrect wire size 5. Wire jammed in bender bar grooves	"O" Page 26,27 "O" Page 26,27 "P" Page 27 "N" Page 26 "G,I" Page 22,23
9. Both stitcher legs are either too long or too short	Face plate not adjusted properly	See "Changing Work Thichness" Page 12

OB olmedo badía
Olmedo Badía
www.olmedobadia.com
info@olmedobadia.com
Tel. 55-5557-0397

M2000 Head Trouble Shooting

TROUBLE	POSSIBLE CAUSE	REMEDY
B. WIRE BUCKLES		
1. Wire buckles above the grip and below the tension pawl 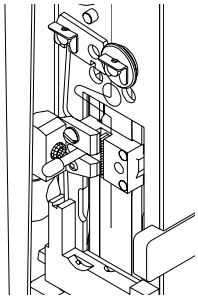 Figure 16 (CTTT2605 Scene 10VA)	1. Worn driver bar 2. Worn bender bar latch 3. Worn or broken bender bar friction plug and/or spring	"I" Page 23 "J" Page 24 "H" Page 22
2. Wire Buckles above the wire cutters and below the grip 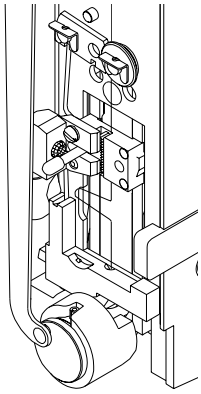 Figure 17 (CTTT2605 Scene10VB8)	1. Improperly aligned rotator 2. Worn or broken wire cutters 3. Burrs on rotator 4. Improperly adjusted lower wire straightner 5. Worn or broken wire cutter operating slide 6. Wire cutter slot in face plate worn	"O" Page 26,27 "L" Page 25 "O" Page 26,27 "P" Page 27 "M" Page 26 "L" Page 25
C. GRIP		
1. Grip does not close with position lever up.	Face plate is too high	Loosen face plate screw, turn set screw (item 36H, page 40) downward slightly in face plate clip (item 35H, page 40), retighten face plate screw.

Olmedo Badía
www.olmedobadia.com
info@olmedobadia.com
Tel. 55-5557-0397

Drive Trouble Shooting

TROUBLE	POSSIBLE CAUSE	REMEDY
On/Off switch does not light when switched on	Power cord unplugged	Plug in power cord
	Circuit breaker is blown	Press in extended circuit breaker NOTE: If recently blown, wait 10 min. before pressing in
	Faulty electrical connection	Use electrical schematic page 42, 43 to check wiring
Stitcher drive does not operate with work trip	Safety switch is not being depressed by front guard	Adjust front guard and/or safety switch bracket
	Foot switch is plugged in	Unplug foot switch
	Circuit breaker is blown	Press in the extended citcuit breaker. NOTE: If recently blown, wait 10 min. before pressing in
	Faulty foot switch jack	Repair or replace foot switch jack See foot switch schematic pages 42 and 43 for reference
	Contaminants on electrical contacts of trip mechanism	Turn trip lever knob counter clockwise and move trip mecha-nism from front to back a few times
	Faulty electrical contact of trip machanism. (Pressing the trip should break the circuit between the round trip locating rod, Item 25 page 35, and the hexagonal paper trip rod, Item 24 page 35)	Remove trip machanism, clean, repair, or replace contaminated or damaged items
	Faulty electrical connections	Use electrical schematic page 42, 43 to check wiring
	Faulty safety switch	Replace switch
	Faulty motor (test using 90 vdc)	Replace motor
	Faulty circuit board	Replace circuit board

Drive Trouble Shooting

TROUBLE	POSSIBLE CAUSE	REMEDY
Stitcher drive does not operate when foot switch is depressed	Safety Switch is not being depressed by front guard	Adjust front guard and/or safety switch bracket
	Circuit breaker is blown	Press in the extended circuit breaker. NOTE: If recently blown, wait 10 min. before pressing in.
	Faulty foot switch (pressing foot switch should break contacts of switch inside Footswitch assembly)	Replace footswitch
	Faulty electrical connections	Use electrical schematic page 42, 43 to check wiring
	Faulty safety switch	Replace switch
	Faulty motor (test using 90 vdc)	Replace motor
	Faulty circuit board	Replace circuit board
Stitcher keeps cycling, without depressing footswitch or work trip, until power is shut off	Faulty cam switch	replace switch
	Faulty electrical connections	Use electrical schematic page 42, 43 to check wiring

OB olmedo badía
Olmedo Badía
www.olmedobadia.com
info@olmedobadia.com
Tel. 55-5557-0397

NOTES

CAUTION

Turn Power OFF Before making Any Adjustments

A. Insufficient or Excessive Compression

Proper compression of work between the clincher and the bender bars is necessary so that the stitch penetrates the work material and clinches correctly. To test for compression, drive several stitches into sample work material. With proper compression, stitches hold the work together firmly and the clinched legs do not overlap. In the following instances, either one or all of the conditions may exist: with insufficient compression, stitch legs overlap, crown of the stitch is fractured, and the work mutilated. To change compression adjust the table/clincher bracket.

B. Table/Clincher Bracket Adjustment (Figure 18)

1. Remove wire from rotator, and turn the jog knob clockwise until the bender bar is fully down.
2. Loosen the two screws (Index A) securing the table/clincher bracket (Index B) to the stand (Index C).
3. Move the table/clincher bracket up until the top of the clincher assembly squarely touches the bottom of the fully lowered bender bar. (Index D)
4. Retighten the two screws.

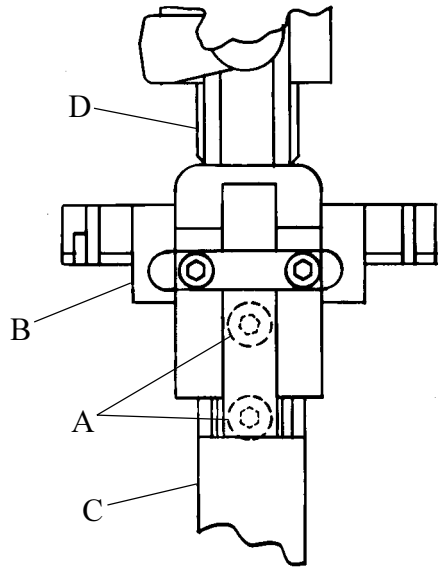

Figure 18
(QF27F9)

C. Clincher (Figure 19)

The purpose of the clincher is to turn the legs of the stitch back after they have penetrated the work material.

With the Activated (moving) Type clincher, the stitch legs must enter the clincher at the same time and with equal spacing from each side. When the stitch legs have penetrated the work material, the moving clinchers are raised to bend the legs towards each other and up flat against the work. The clincher points must bend both legs of the stitch against the work with the same force. Clincher points must always move freely and not bind. Dirt, wire chips, etc. will cause the points to bind.

The clincher points are in a retracted position in the clincher box until the stitch legs penetrate the work material. After the legs penetrate, the clincher points move upward to give a neat, flat clinch against the bottom surface of the work material. If the clincher points remain in the up position, the legs of the next stitch cannot penetrate the work material, causing the stitch legs to buckle and/or the corners of the crown to fracture. Examine the clincher points, clincher slide for possible binding. Clean and oil. If clincher points rise to high, they fracture the stitch legs and/or mar the work. If the points do not rise high enough, the legs will not clinch flat. Adjust the height of the clincher points.

OB olmedo badía
Olmedo Badía
www.olmedobadia.com
info@olmedobadia.com
Tel. 55-5557-0397

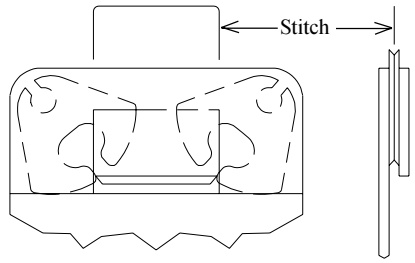

Figure 19
(SK852F)

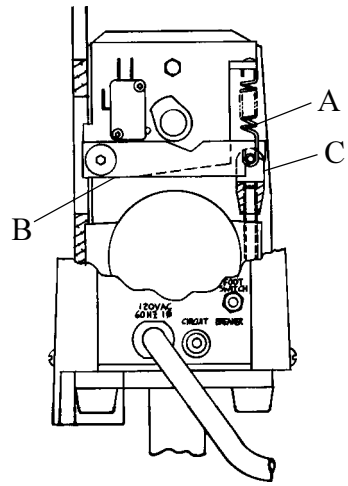

Figure 20
(QF27F10)

D. To Adjust Clincher Points Height (Figure 20)

1. Turn off power and unplug power cord.
2. Remove wire coil, washer, compression spring and stud.
3. Swing up front guard assembly to 1st detent position.
4. Unscrew the four screws securing cover and remove cover.
5. Unhook and remove the extension spring (Index A).
6. Lift clincher operating lever (Index B) away from clevis (Index C) and turn clevis clockwise to lower the clinchers, counterclockwise to raise the clinchers. Note: clinchers will raise or lower .025" per 360 degree turn of clevis.
7. Reassemble unit.

If the clinchers points are broken, the stitch legs will not clinch and/or be deformed. Reverse or replace the clincher points.

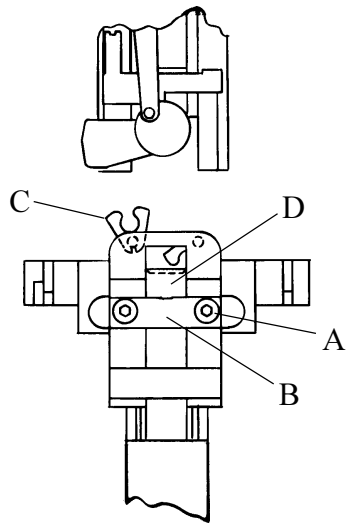

Figure 21
(QF27F11)

E. To Reverse or Replace Clincher Points (Figure 21)

1. Remove the two screws (Index A) securing the clincher slide brace (Index B). Remove brace.
2. Move clincher slide away from clincher points (Index C).
3. Raise the clincher points, and reverse or replace.
4. When reassembling, push the clincher points down so that the top lip of the clincher slide (Index D) will engage the center of the clincher points. Note: Clincher slide must move freely up and down after reassembly.

The proper alignment of the clincher under the formers is one of the most critical adjustments on the stitcher. Therefore, extreme care should be taken to align the clincher so that both legs of the stitch strike the clincher at the same time with equal spacing from the outside edges of the grooves (See Figure 19). Also, the clincher must be aligned with the bender bar grooves of the head from front to rear so that the legs enter the clincher at the widest section of the clincher grooves.

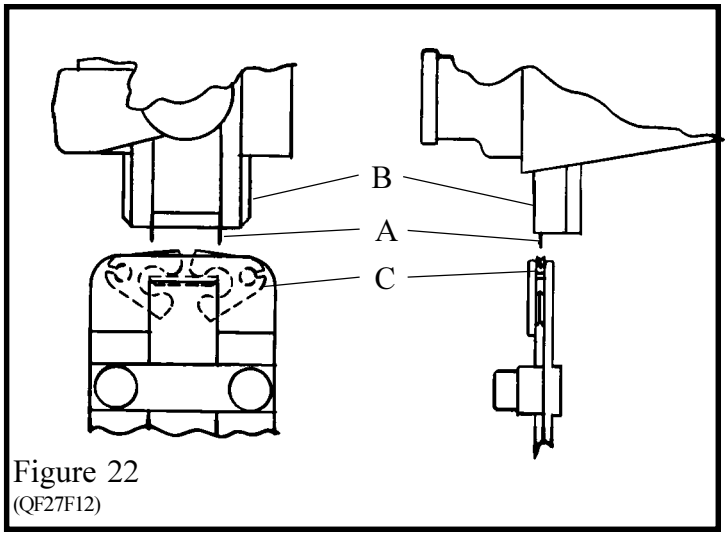

Figure 22
(QF27F12)

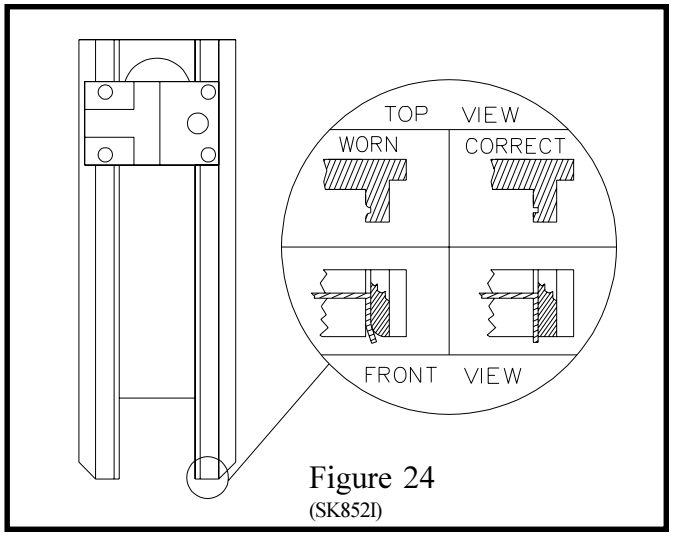

Figure 24
(SK852I)

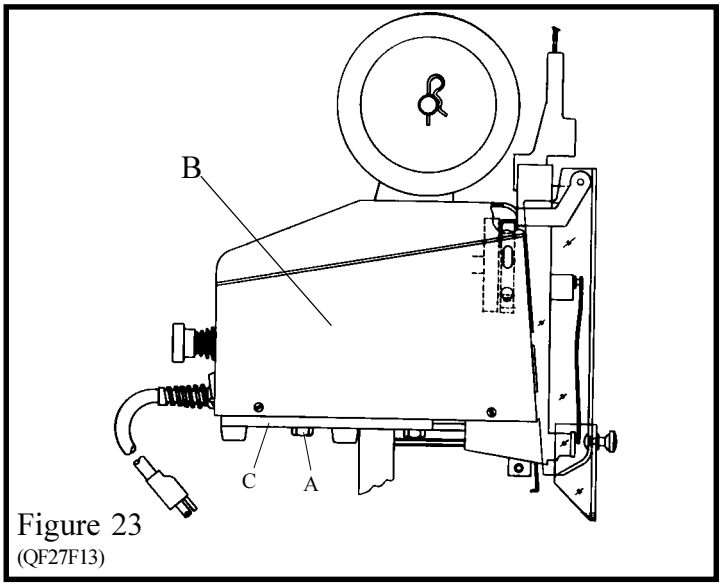

Figure 23
(QF27F13)

F. Head/Clincher Alignment (Figures 22, 23)

To test alignment: Drive several stitches into a section of material identical to that which is to be stitched. The clinched legs should be identical and aligned with each other. If the legs are not in alignment, make the following adjustments:

1. With power off, press in and turn the jog knob clockwise until the legs of the stitch (Index A, Fig. 22) appear just below the bender bar (Index B).
2. Loosen the four bolts (Index A, Fig. 23) securing the base (Index B) to the stand (Index C).
3. Move the base until the legs of the stitch line up with the clincher points (Index C, Fig. 22).
4. Tighten the four base mounting bolts.

G. Bender Bar (Figure 24)

The bender bar bends the wire over the rotator and forms it into an unclinched stitch. The legs of the stitch are guided towards the work material by the bender bar grooves. The legs of the unclinched stitch should be perpendicular to the crown. When the bender bar grooves become worn, the legs tend to flare out (Figure 24) as they emerge from the grooves. This causes the legs to strike the clincher improperly. As a result, one or both legs will crumple and a broken driver bar or a broken bender bar can result. If the lower end of the bender bar groove becomes chipped, it will not support the wire and may cause the stitch to break at the crown. Replace the bender bar assembly (See Section H or Fig. 25). Other bender bar functions are related to wire cutting (Section L), and driving (Section I).

H. Bender Bar Friction Plug And/Or Spring (Fig. 25)

Two parts furnish pressure to coordinate movement of driver bar and bender bar. If pressure is insufficient, proper timing is not maintained for the action of the grip. As a result, wire feeds backwards. Replace the plug and/or spring.

To replace bender bar friction plug and/or bender bar friction spring:

1. Remove bender bar assembly by following steps 1 through 23 of "Removing and Dismantling M2000 Head", Pages 29 and 30.

OB olmedo badía
Olmedo Badía
www.olmedobadia.com
info@olmedobadia.com
Tel. 55-5557-0397

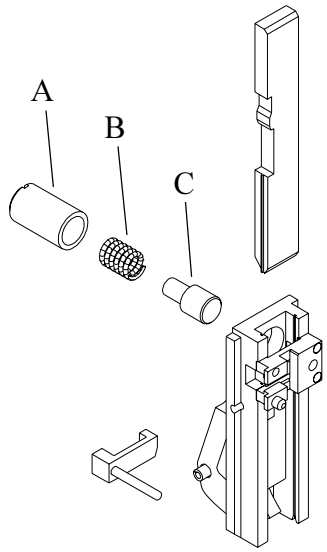

Figure 25
(CTTT2605 Scene 13)

2. Remove bender bar friction bushing (Index A). Bender bar friction plug (Index C) and spring (Index B) will be released forward from bender bar assembly.
3. Replace plug and/or spring and reassemble.

I. Driver Bar (Figure 26)

The driver bar (Index A) has several functions:

1. It imparts the downward thrust from the driving slide assembly (Index B) to the bender bar assembly (Index C).
2. It returns these parts to the neutral position on the upstroke.
3. In conjunction with the grip release slide (Index D), it controls the movement of the bender bar latch (Index E) that opens and closes the grip (Index F).

If the notches (Index G) at the top left side of the driver bar become worn, the grip will not remain open on the upstroke. As a result the wire feeds backwards and buckles above the grip and below the tension pawl. Worn notches can also cause uneven wire draw. Replace the driver bar.

The notches shown on left side of driver bar play an important part in function of bender bar assembly therefore, corners should be free of dirt and notches not marred.

The driver bar rides within the bender bar grooves as part of the bender bar assembly. As this assembly reaches the lower contact point of the cam in the

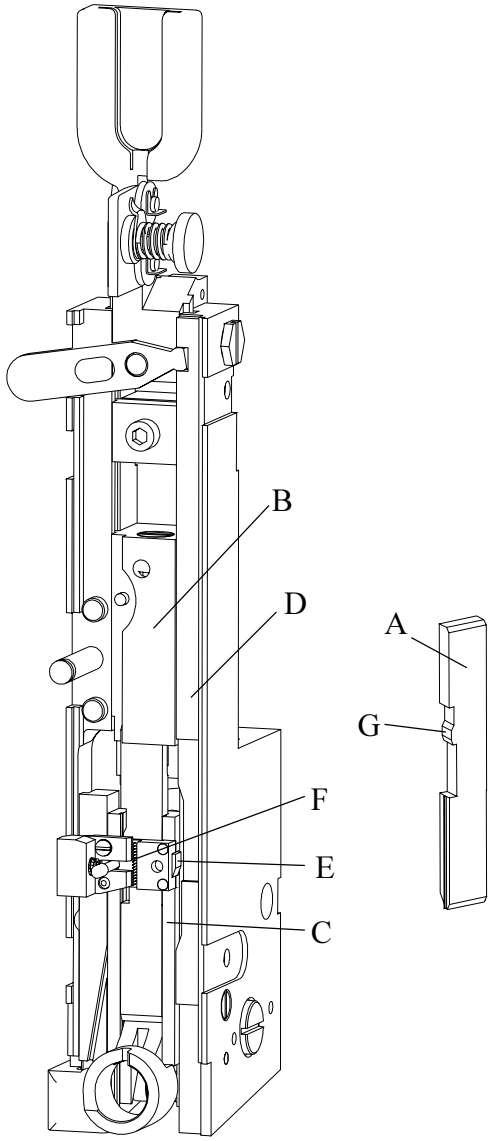

Figure 26
(CTTT2605T3 Scene 10, CA9012M)

grip release slide, the bender bar latch is forced inward, releasing the wire grip and permitting the bender bar assembly to continue downward with the end of the driver bar riding on top of the formed stitch. When the bender bar is stopped against the work material, the driver bar continues downward to exert pressure on the crown of the stitch, driving it through the work material.

If the end of the driver bar is chipped it allows the legs of the stitch to back up into the broken area. This causes the corner of the crown to fracture or a "spike" section to protrude above the crown. A chipped driver bar is usually the result of driving a stitch on top of another stitch. A worn driver bar often causes deformed stitches or fracturing at the corners of the crown.

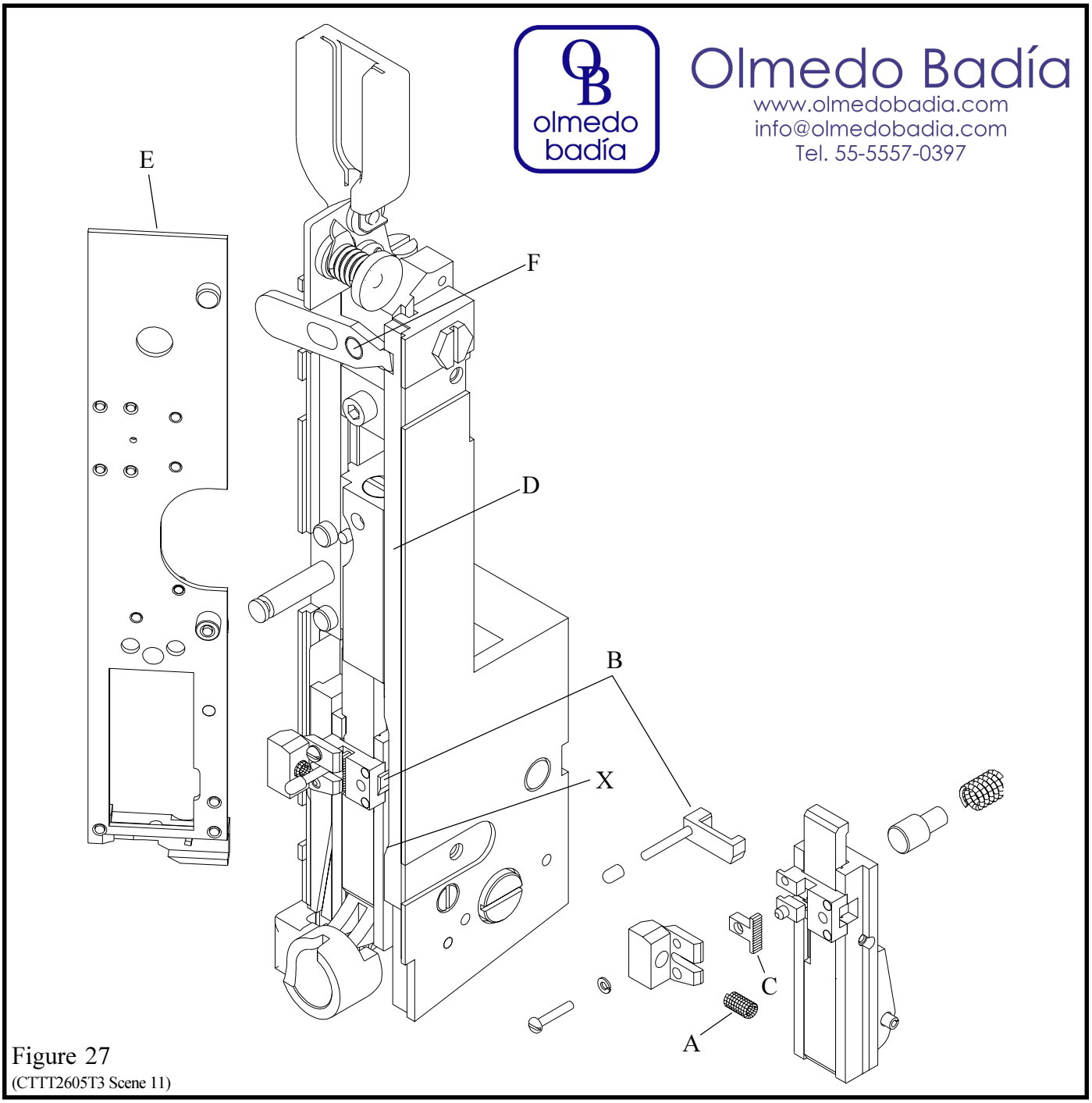

Figure 27
(CTTT2605T3 Scene 11)

J. Bender Bar Latch

The bender bar latch opens and closes and is actuated by the grip release slide and driver bar. If the contact points of the latch become worn, timing of the grip is erratic and uneven wire feed results. A dirty latch will decrease pressure of the grip on the wire. This causes wire slippage. Clean or replace the latch.

K. Grip, Grip Release Slide and Face Plate: (Figure 27)

The grip spring (Index A) exerts pressure on the benderbar latch (Index B) to close the grip (Index C) at the start of the down stroke. The grip release slide (Index D) actuates the bender bar latch at point X to open the grip after the correct amount of wire has been fed to make a stitch. The serrated teeth on the grip must be sharp or slippage will occur, producing uneven wire draw.

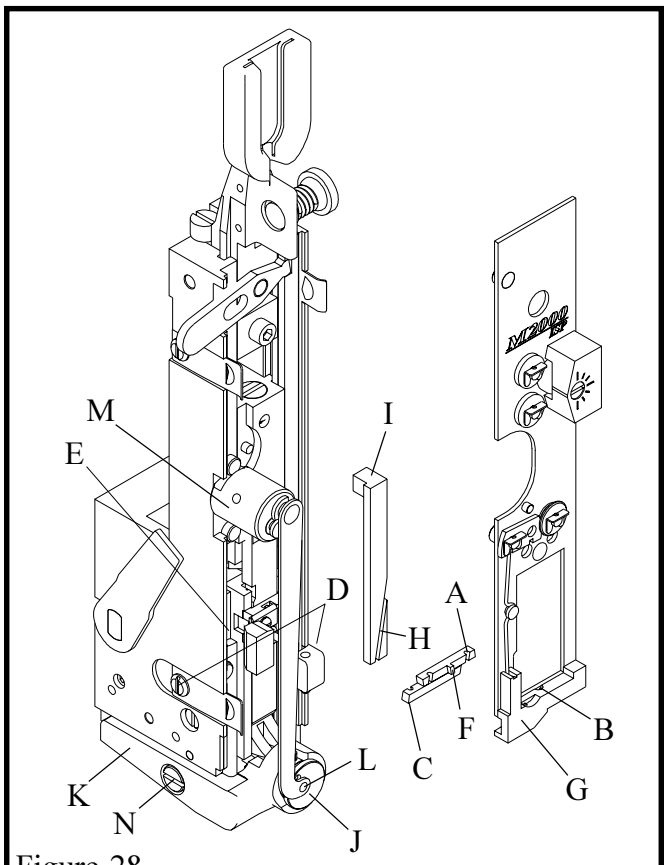

Figure 28
(CTTT2605T3 Scene 12)

When the face plate (Index E) is adjusted (See "Changing Work Thickness", page 12) a pivotal action (at point F) changes the position of the grip slide. When the face plate is raised, it moves the grip release slide down. The gripper can then remain closed longer, on the downstroke, feeding more wire for the stitch. When the face plate is lowered, it moves the grip release slide up. The gripper will open sooner on the downstroke, feeding less wire for the stitch.

If the grip is weak, uneven wire draw will result. Replace the grip spring. If the contact points on the grip release slide and/or the bender bar latch are worn, wire adjustment will not remain accurate.

The face plate stops the bender bar assembly at the top of its stroke and allows the bender bar latch to close the grip. When the face plate is too high, too much of the upstroke has been used before the bender bar hits the face plate. In the remaining portion of the upstroke, the driver bar cannot continue upward enough to release the bender bar latch so that it can close the grip.

L. Wire Cutters: (Figure 28)

The purpose of the wire cutters is to shear the wire cleanly. There are two wire cutters, upper and lower. The upper wire cutter (Index A) recieves wire from the grip through the wire cutter lead-in-hole (Index B). It also serves as the cut-off die. The lower wire cutter (Index C) is the cutting knife. If the cutter breaks, it will cover the lead-in hole. This prevents the wire from feeding into the rotator. If the cutting surfaces become worn, burrs will result on the end of the wire. This prevents the wire from feeding into the rotator. As a result, the wire buckles between the cutters and the wire grip. Reverse, interchange or replace the cutters.

To Reverse, Interchange or Replace the Wire Cutters:

1. Loosen both face plate retaining clips (Index D) at bottom of bonnet.
2. Spring the face plate out 1/8" while holding the cutter clide in position (Index E).
3. Slide the cutters out to the left.
4. Reverse, interchange or replace the cutters.

NOTE

While installing the cutters, make sure that (1): lip on upper cutter (Index F) fits into the recess behind the face plate (Index G) and (2):that the lip on the bottom cutter fits into the slot (Index H) in the wire cutter operating slide (Index I).

The wire cutter operating slide actuates the lower wire cutter. If the slide is worn or broken, the wire cutter is not actuated. Replace the operating slide. The slot in the lower part of the face plate contains the wire cutter and maintains a close fit for wire shearing. If this slot becomes oversized, the wire will not be cut off. Replace face plate. **To Replace Face Plate (See Steps 1 through 10, Section M)**

NOTE: (Figure 29)

The lug (Index C) in the faceplate must match the slot (Index D) in the grip release adjusting lever (Index E) or damage to the head may result.

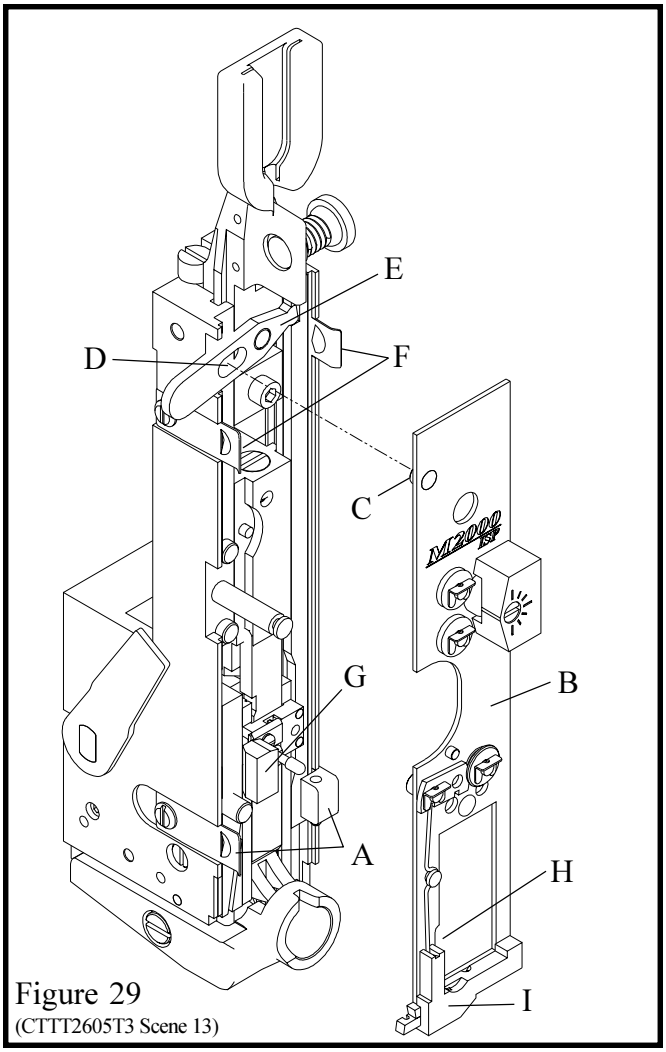

Figure 29
(CTTT2605T3 Scene 13)

M. Wire Cutter Operating Slide

The wire cutter operating slide actuates the lower wire cutter which acts as the cutting knife. If the slide is worn or broken, the wire cutter is not actuated. Replace the operating slide.

To Replace The Wire Cutter Operating Slide:

1. Cut the wire at the bracket and pull the loose end out.
2. Remove the stitcher head assembly.
3. Lift end of spring (Index L, Figure 28) out of rotator.
4. Swing the spring up to disengage it and lift out.
5. Slip the rotator operating cam (Index M, Figure 28) forward and off the stud.
6. Pull the rotator forward.
7. Loosen the two face plate retaining clips (Index A, Figure 29) and rotate them downward.
8. Push two face plate retaining clips (Index F) outward while lifting face plate up, or remove retaining clips to release face plate.
9. Position grip spring housing (Index G) between tension pawl spring retainer (Index H) and cutter housing (Index I).
10. Remove face plate (Index B) by sliding face plate to the left and lifting up.
11. Remove the cutter operating slide (Index I, Figure 28).
12. Insert a new cutter operating slide.
13. Reassemble

N. Proper Wire

The Bindery Mate is designed to use 25 gauge (.020" diameter) 120,000 to 159,000 psi tensile strength bookbinders wire.

If the wire used is larger than the bender bar grooves were designed for, it will fracture at the stitch corners and come out in pieces. Also, serious damage to the stitcher may result. If the wire used is smaller than the bender bar grooves were designed for, the legs of the stitch do not fit snugly in the grooves and may tend to buckle when they strike the work material because they are not fully supported.

O. Rotator (Figure 28)

The rotator (Index J) (1) recieves the wire from the cut-off die, (2) holds the wire while it is being cut, then (3) turns it to a horizontal position, moves it under the bender bar grooves and (4) supports the wire while it is being formed into a "U-shaped" stitch.

The wire lead-in-funnel of the rotator must be aligned with the wire as it comes through the wire cutters. If the rotator is improperly aligned, the wire hits the rotator and buckles. Adjust upper two wire straightners until wire slips past rotator. Burrs on the rotator prevent the wire from entering the rotator. This causes wire buckling. Remove the rotator and polish the lead-in radius.

The magnets in the rotator hold the wire firmly in the rotator. If a magnet is broken or chipped the wire may fall out. To determine if the rotator has the proper holding strength, remove the rotator and insert a cut length of wire in the rotator. Hold rotator between thumb and forefinger. Attempt to jar wire loose by hitting heel on hand on top of table or against other hand. With proper magnetic holding force wire will remain in rotator. With

insufficient holding force wire will fall from rotator. Replace the rotator.

The rotator holder and rotator operating spring are responsible for alignment of the wire beneath the bender bar grooves. The position of the rotator holder determines how far the rotator is pushed forward under the bender bar by the rotator operating spring (Index L). A weak spring will not push the rotator in far enough and with this improper alignment the bender bar will knock the wire from the rotator or will shear the wire into pieces. To secure proper alignment, check the position of the rotator operating spring. Make any necessary adjustment of the rotator holder or replace the rotator operating spring if weak.

The wire is fed into the rotator and held for forming. If the rotator is dirty, the wire is not gripped securely enough and drops out. Remove and clean the rotator. If the edges over which the wire is formed are sharp, the corners of the stitch crown will fracture. Remove the rotator and polish the edges with a fine emery cloth.

To remove, Adjust or Replace the Rotator Holder:

1. Swing the rotator operating spring to the left.
2. Remove the rotator.
3. Loosen the rotator holder screw (Index N).
4. Adjust the rotator holder screw.
5. Re-assemble.

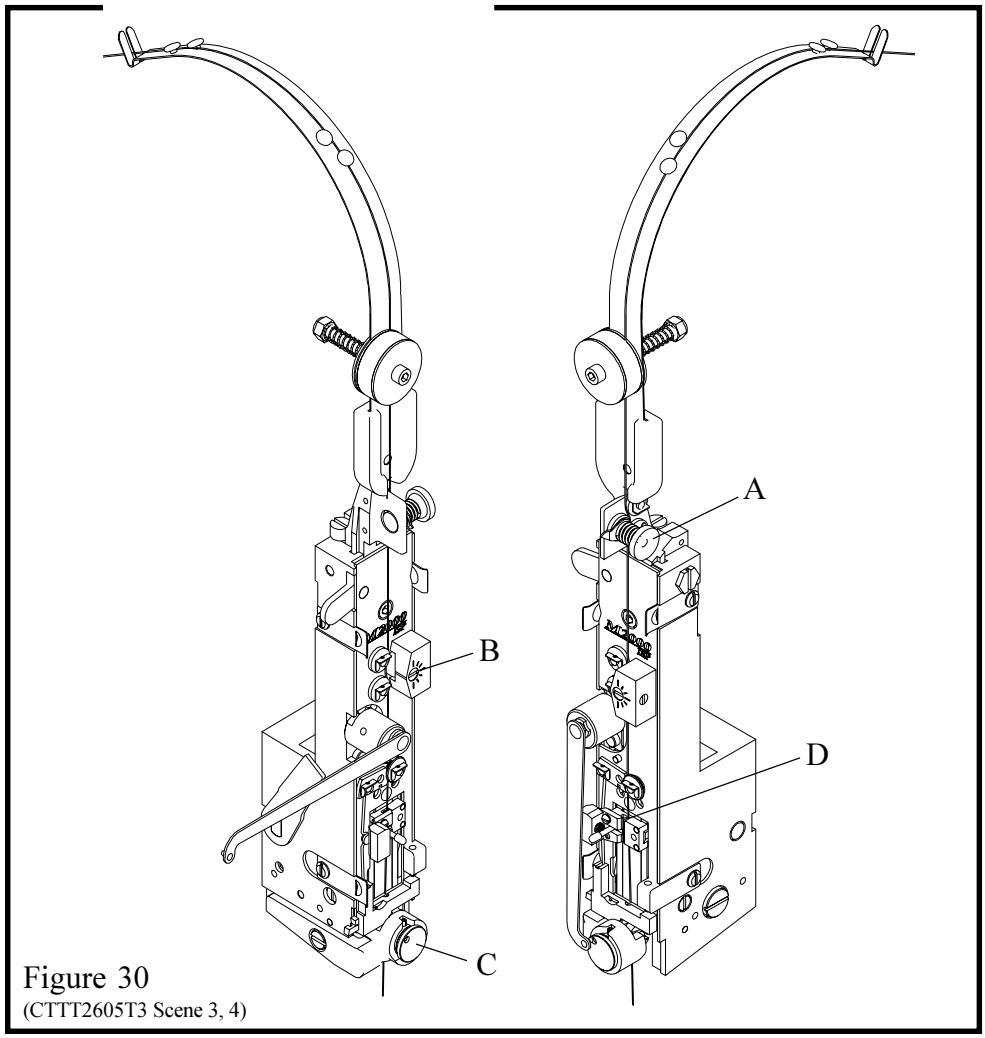

Figure 30
(CTTT2605T3 Scene 3, 4)

P. Wire Straighteners: (Figure 30)

All coils of stitching wire have a certain amount of bundle curve. The purpose of a wire straightener is to remove this curve. There is both an upper wire straightener (Index A) and a lower wire straightener (Index B) on all M2000 Model Stitchers. See "Threading Wire and Adjusting Wire Straighteners" page 6.

The upper wire straightener should feed wire parallel to the faceplate. This insures that the wire will properly enter the rotator and will be aligned with the grooves in the bender bar. If the wire is not parallel to the face plate the wire is sheared in the rotator as the bender bar descends. Adjust the upper wire straightener.

The lower wire straightener directs the wire straight down so that it enters the rotator (Index C). If the wire is not straight enough it hits the rotator and buckles. Adjust the lower wire straightener so that the wire points straight down as in figure 30. Improper straightening of the wire can also cause the stitch legs to buckle or turn out because they strike the clincher improperly. Excessive tension on the wire straightener prevents the grip (Index D) from feeding the wire smoothly. This causes variation in leg length.

NOTE:

Check the wire straighteners when changing the coils to insure the accurate feeding of wire.

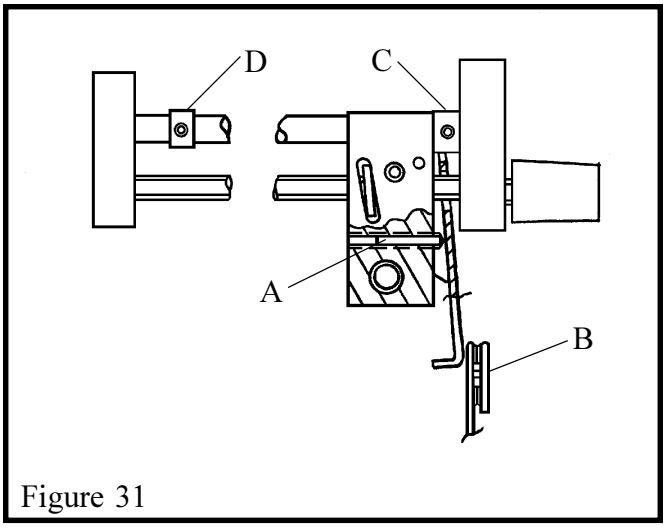

Figure 31

Q. Supporter

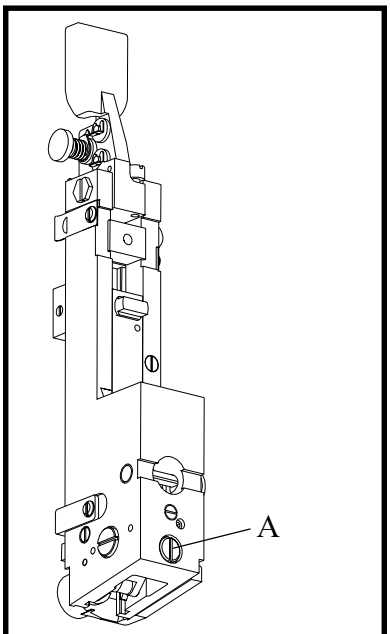

Figure 33
(CTTT2605T3 Scene 14)

The supporter furnishes the necessary support to the inside surface of the stitch so that it does not buckle as it is being driven into the work material. A lack of (or insufficient) support will often cause the stitch crown to wrinkle or the legs of the stitch to buckle. Tighten the supporter spring bushing (Index A, Figure 33) or replace the spring.

If the corners of the top surface of the supporter are too sharp, or nicked, the corners of the stitch crown will fracture. To inspect the supporter:

1. Turn the jog knob clockwise until the bender bars touch the work material and the legs of the stitch are about to leave the bender bar grooves. At this point, the supporter should be touching the underside of the crown. DO NOT TURN THE MOTOR ON
2. Continue turning the jog knob until the stitch is completely driven. Although the supporter is gradually retracted by the driver, it should remain under the crown of the stitch until the last instant before the crown touches the work material.

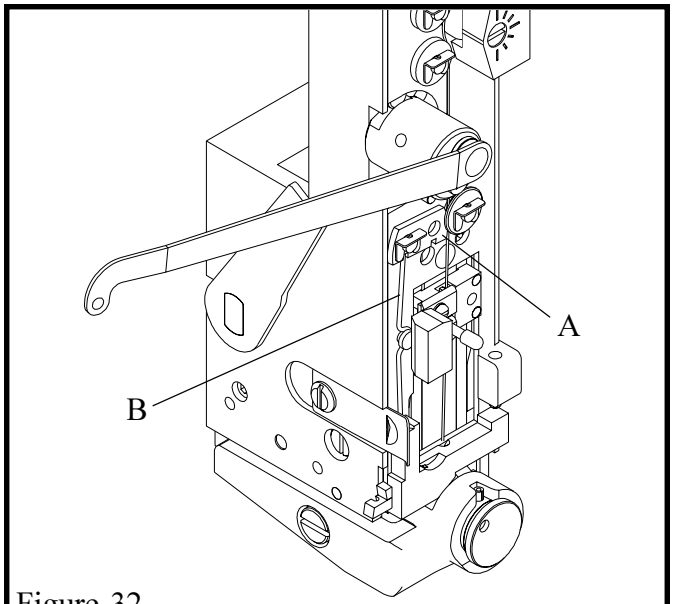

Figure 32
(CTTT2605T3 Scene 15)

R. Tension Pawl: (Figure 32)

The tension pawl (Index A) and spring (Index B) apply pressure on the wire to prevent back feed. If the pawl becomes worn or the spring becomes weak, the wire feeds backwards. Reverse or replace the tension pawl and/or spring.

S. Work Trip: (Figure 31)

The amount of work trip lever overtravel can be slightly increased or decreased by turning the overtravel adjustment screw (Index A) located at the rear of the trip lever guide.

1. Turn screw counterclockwise to increase trip lever overtravel.
2. Turn screw clockwise to decrease trip lever overtravel., NOTE: A small amount of trip lever overtravel is always required or work trip will not function properly.

NOTE:

Trip lever must NOT touch the clincher assembly (Index B) when moved fully forward or the rear table when moved fully back, or unit will not work properly. If the trip lever touches clincher decrease overtravel or loosen set screw in front bumper (Index C) and reposition and secure further back. If the lever touches rear table loosen set screw in rear bumber (Index D) and reposition and secure further forward.

REMOVING AND DISMANTLING M2000 HEAD

A

Note: Before removing head use hand jog to make sure bender bar is all the way up.

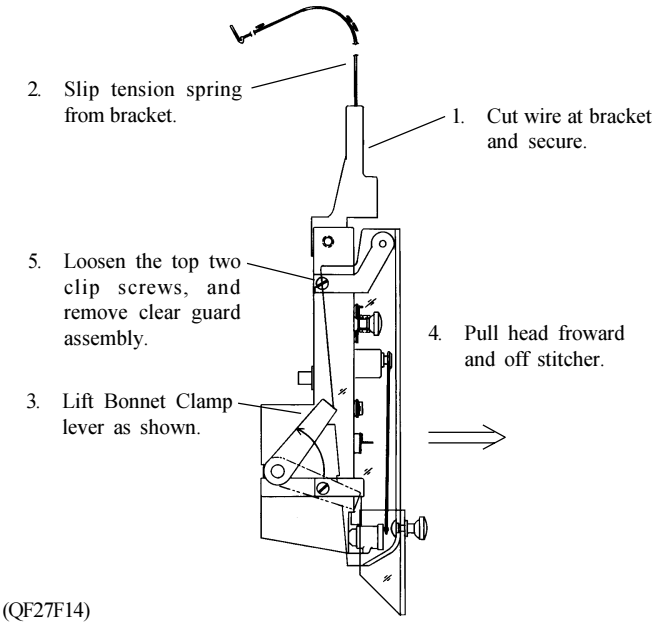

(QF27F14)

CAUTION

As a precautionary measure-When removing the head from any stitching machine make SURE that the power to the machine has been turned OFF or disconnected.

B

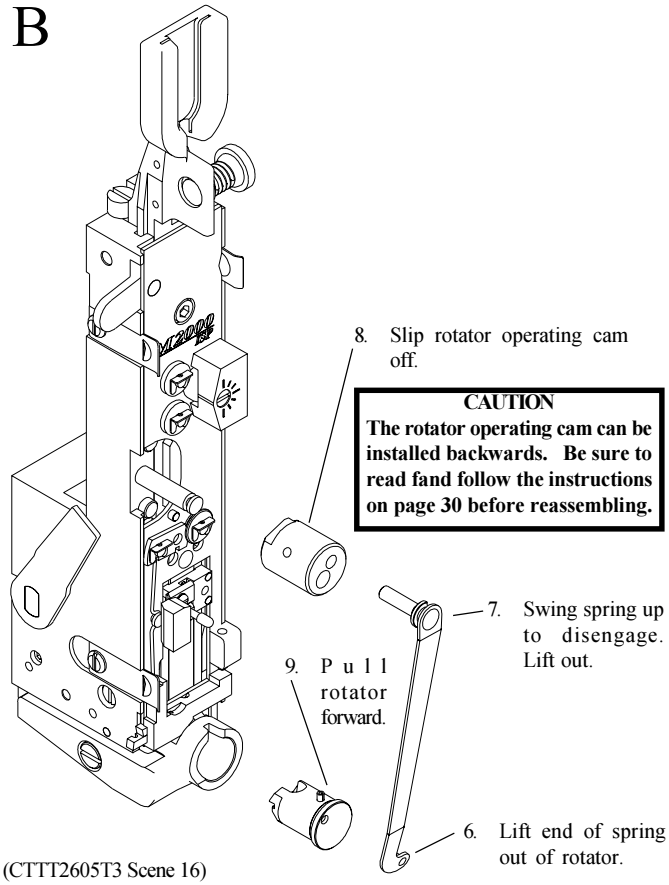

CAUTION
The rotator operating cam can be installed backwards. Be sure to read fand follow the instructions on page 30 before reassembling.

(CTTT2605T3 Scene 16)

C

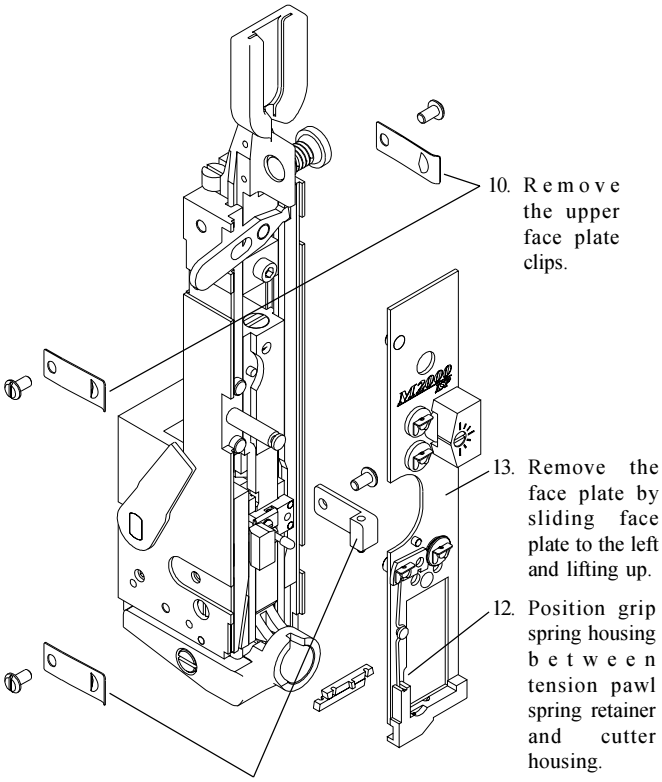

(CTTT2605T3 Scene 17)

D

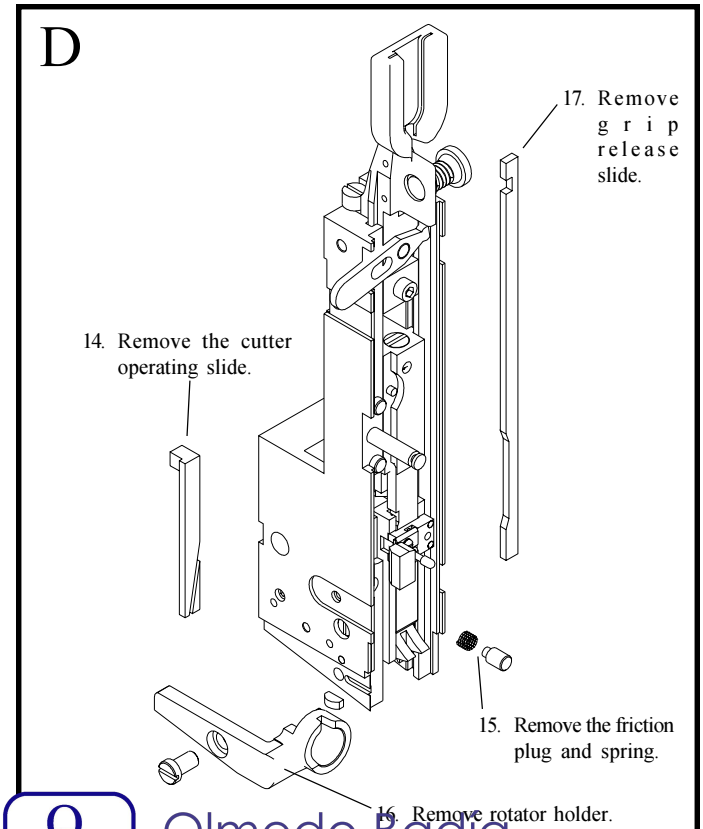

OB olmedo badía
Olmedo Badía
www.olmedobadia.com
info@olmedobadia.com
Tel. 55-5557-0397

(CTTT2605T3 Scene 18)

REMOVING AND DISMANTLING M2000 HEAD

E

22. Loosen face plate clamp screw and slide out face plate locating block.

20. Remove screw

21. Slide tension spring bracket and adjusting lever from top.

18. Remove rotator operating cam stud screw.

23. Slide the driving slide and bender bar assemblies from the top. When reassembling, hook bender bar to driving slide before sliding into place. This must be assembled as a complete unit.

19. Remove rotator operating cam stud.

(CTTT2605T3 Scene 19)

F

DO *NOT* REMOVE OR ADJUST THESE TWO SCREWS.

The screws are factory set to control the supporter lever location.

(CTTT2605T3 Scene 21)

G

How to Install rotator operating cam

A

B

C

Caution

When reassembling, make certain that pin (Index A) is visible and is aligned with slot (Index B) of rotator operating cam (Index C). If not assembled in this way, the bonnet casting will crack or break on the next cycle under power. It is recommended that the stitcher be cycled by hand to test that proper reassembly procedure has been followed.

(CTTT2605T3 Sc

OB olmedo badía
Olmedo Badía
www.olmedobadia.com
info@olmedobadia.com
Tel. 55-5557-0397

DISMANTLING DRIVE

A

NOTE: Head must be removed prior to dismantling drive

6. Remove wire spool stud.
5. Remove conical spring.
4. Remove wire spool washer.
3. Remove coil of wire.
8. Remove cover.
2. Remove spool retainer.
7. Remove cover screws.
1. Remove hairpin cotter

(QF27F15)

CAUTION

Disconnect power to the machine before any disassembly.

B

9. Remove circuit board by gently sqreezing here and then lift off circuit board.

Circuit board

Circuit board support

Note: If replacing circuit board, unplug connector terminal from circuit board after removing board.

(QF27F16)

C

11. Unplug cam switch terminals.

13. Unscrew flat head bolts (4) and remove motor.

12. Remove extension spring.

10. Remove circuit board bracket.

14. Unplug motor terminals.

(QF27F17)

DISMANTLING DRIVE

D

NOTE: Rear table must be removed prior to trip mechanism disassemblly.

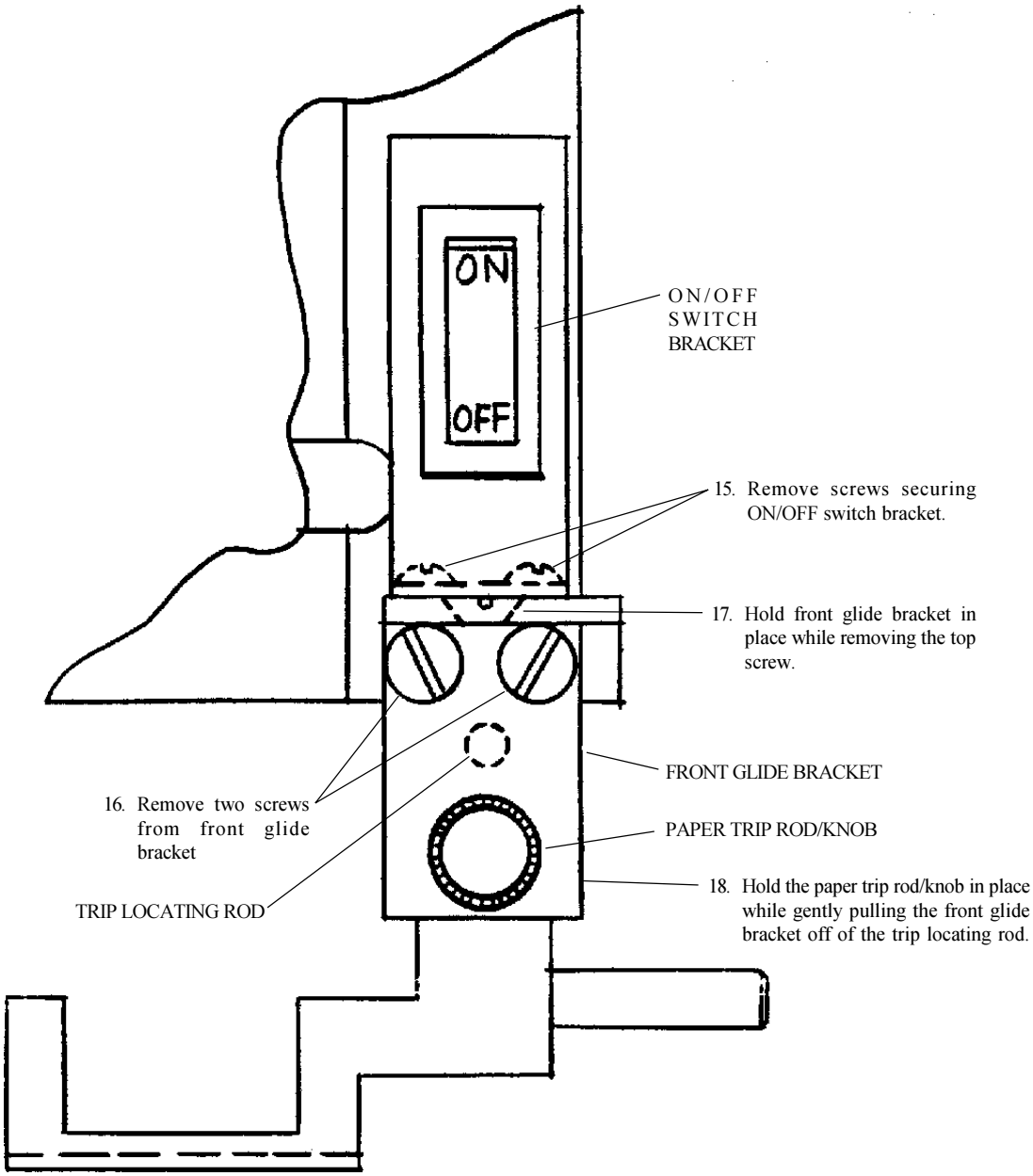

OB olmedo badía

Olmedo Badía
www.olmedobadia.com
info@olmedobadia.com
Tel. 55-5557-0397

(QF27F18)

DISMANTLING DRIVE

E

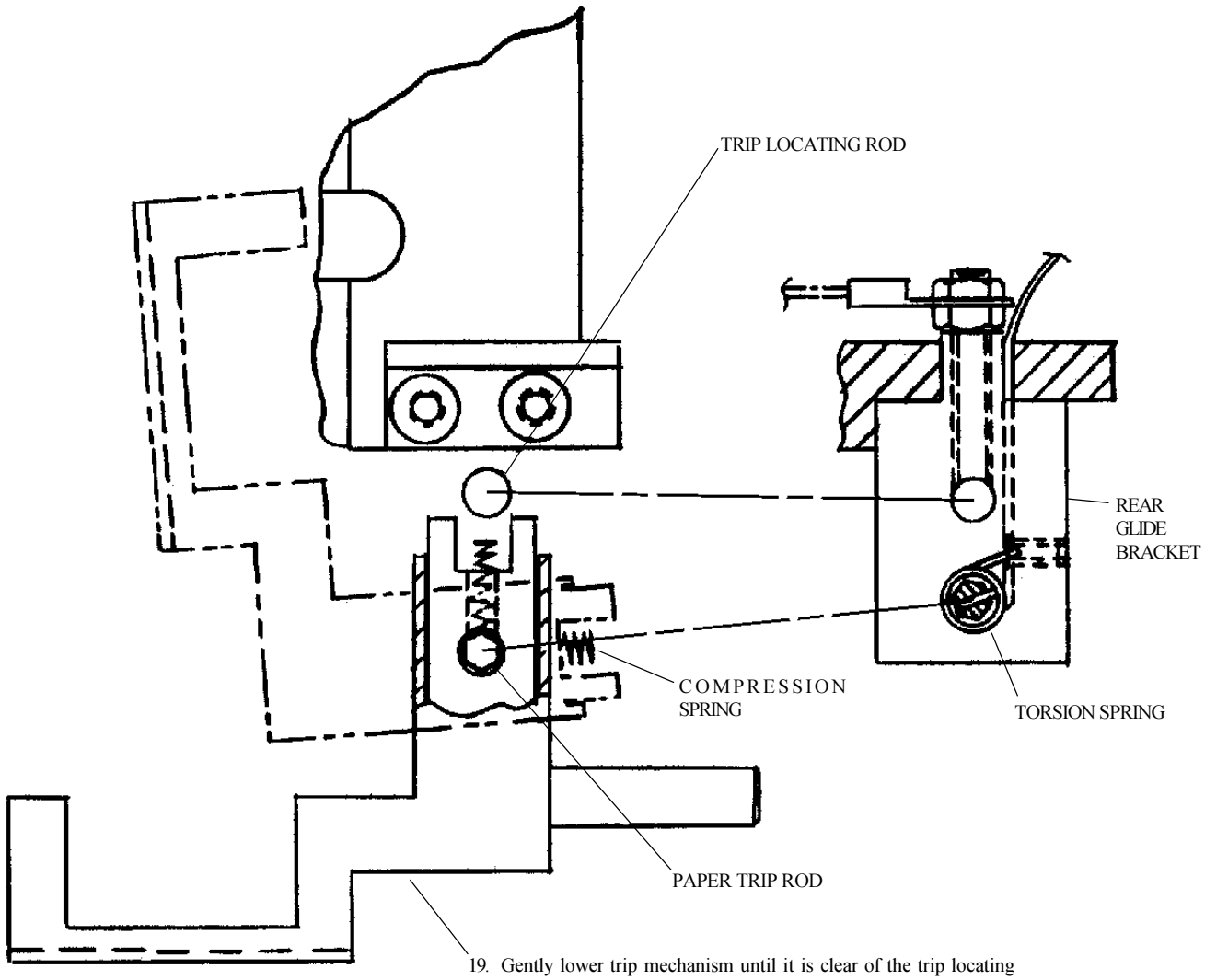

19. Gently lower trip mechanism until it is clear of the trip locating rod. Do not yet pull away from rear glide bracket.

20. Rotate trip mechanism, with paper trip rod, clockwise to unwrap the torsion spring. The trip mechanism with paper rod can now be withdrawn from the rear glide bracket. Reverse procedure for reassembly.

OB olmedo badía
Olmedo Badía
www.olmedobadia.com
info@olmedobadia.com
Tel. 55-5557-0397

(QF27F19)

DISMANTLING DRIVE

Note: Remove saddle/table prior to removing clincher slide

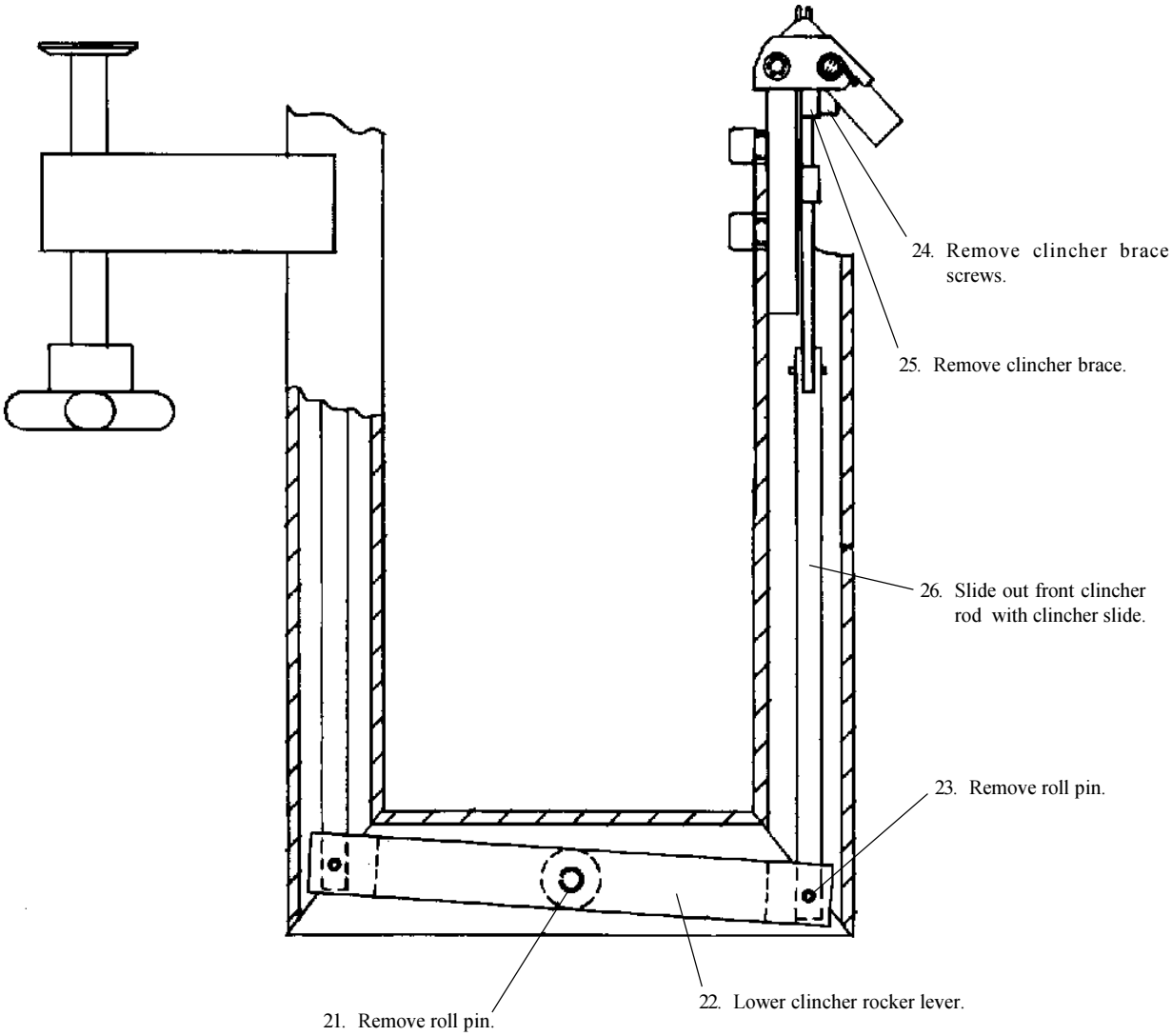

Note: After reassembly, clincher slide must move freely up and down in clincher assembly.

(QF27F20)

Olmedo Badía
www.olmedobadia.com
info@olmedobadia.com
Tel. 55-5557-0397

Section 6

PARTS LIST

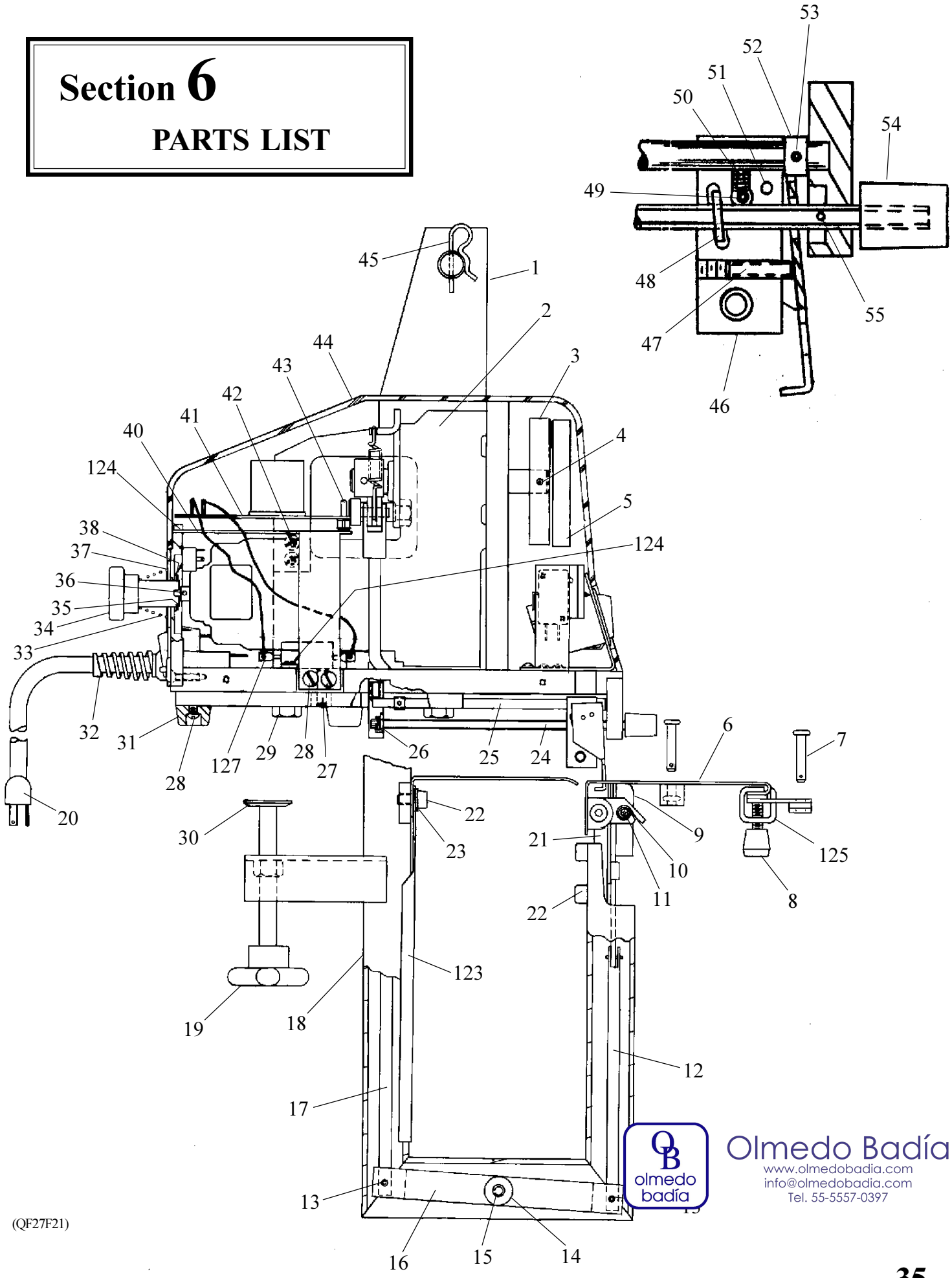

(QF27F21)

Olmedo Badía
www.olmedobadia.com
info@olmedobadia.com
Tel. 55-5557-0397

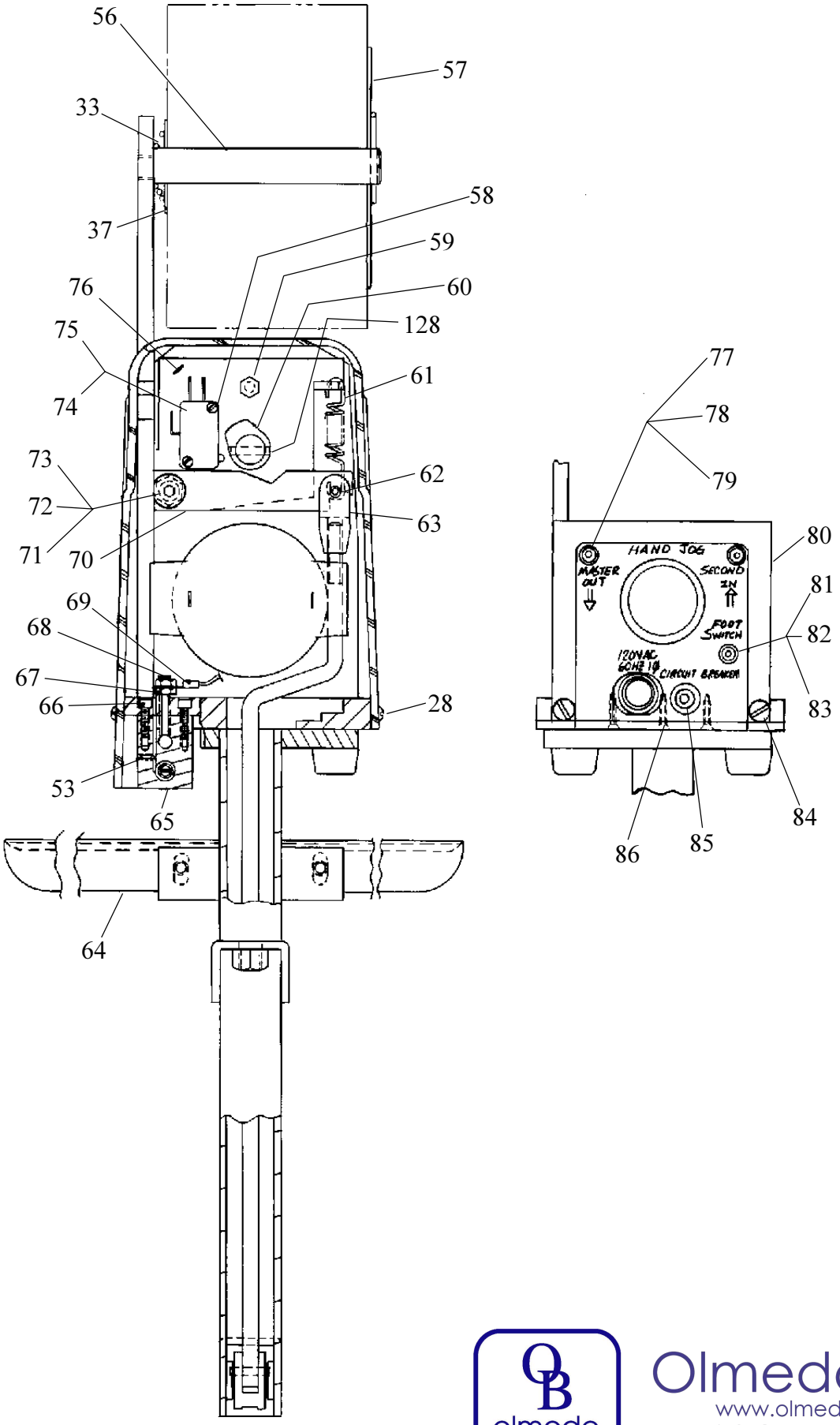

(QF27F22)

Olmedo Badía
www.olmedobadia.com
info@olmedobadia.com
Tel. 55-5557-0397

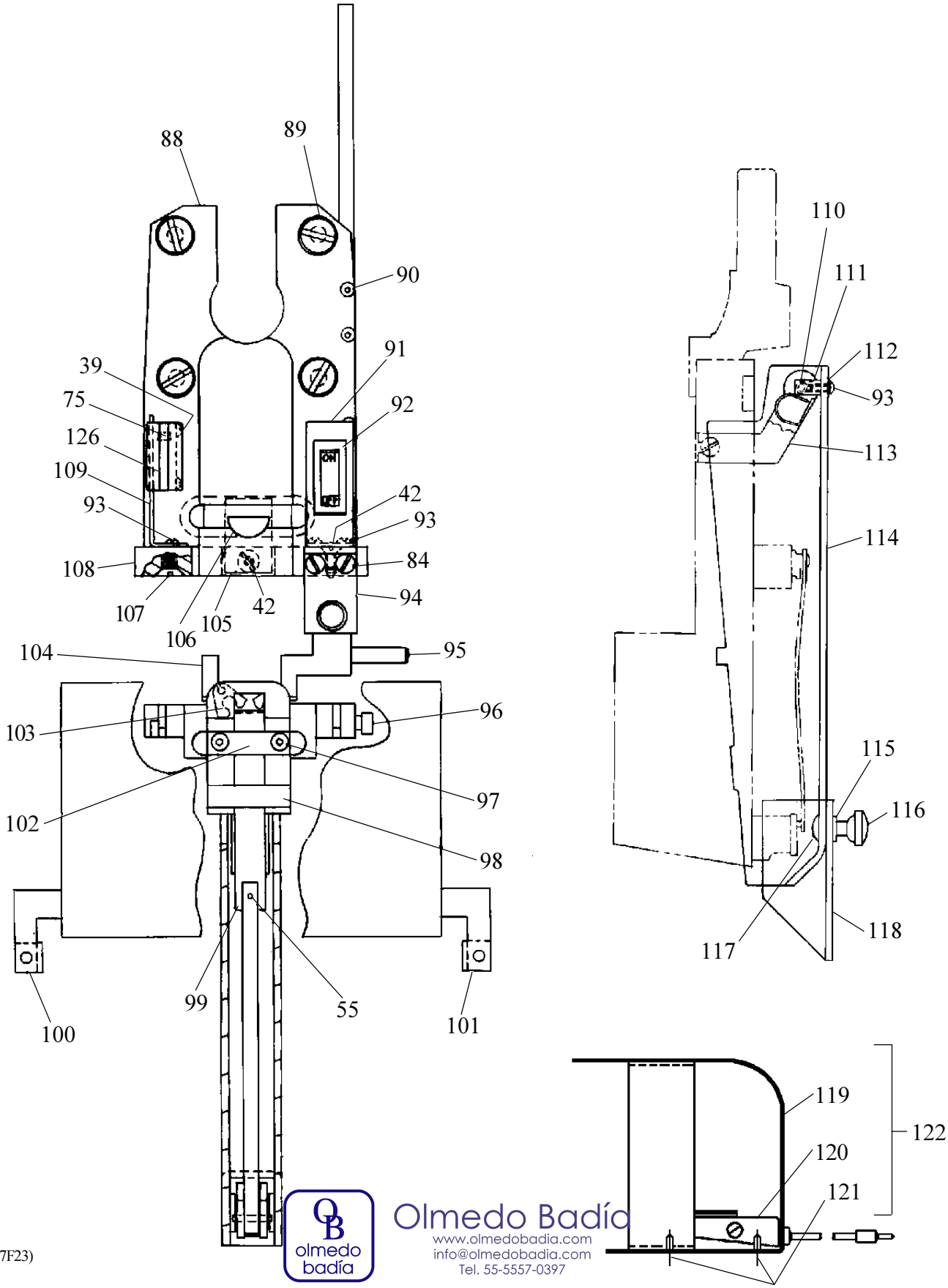

(QF27F23)

olmedo badía
Olmedo Badía
www.olmedobadia.com
info@olmedobadia.com
Tel. 55-5557-0397

MODEL 305

PARTS LIST

(See Pages 40 & 41 for M2000 HEAD Parts List.)

ITEM	PART NO.	DESCRIPTION	QTY	REF. PAGE
1	CK-138	SUPPORT	1	35
2	CG-115-A	GEARMOTOR, 90 VDC (115 V.A.C.)	1	35
	CG-115-B	GEARMOTOR, 180 VDC (230 V.A.C.)	1	35
3	CKK-81-B	CRANK ASSEMBLY, DRIVE SHAFT	1	35
	CKK-81-A	CRANK ASSEMBLY, DRIVE SHAFT	1	35
		(FOR BINDERY MATE PRIOR TO SERIAL # 700)		
4	D-23940-F	PIN, ROLL, .125 x .88 Lg. (CRANK)	1	35
5	CA-44-E	HEAD OPERATING LINK	1	35
	CA-44	HEAD OPERATING LINK	1	35
		(FOR BINDERY MATE PRIOR TO SERIAL # 700)		
6	CKK-154	SADDLE AND TABLE ASSEMBLY	1	35
7	CK-158	PIN, CLEVIS, COTTERLESS	4	35
8	CB-1253	KNOB	1	35
9	CK-150	BRACE, TABLE	2	35
10	CK-180-B	SPRING, TORSION, TABLE	1	35
11	CK-152	BAR, PIVOT, TABLE BRACE	1	35
12	CK-148	ROD, CLINCHER, FRONT	1	35
13	D-37769-F	PIN, ROLL, .125 x .500	2	35
14	CT-199	WASHER, .25 ID x .625 OD x .093	2	35
15	CB-835-Z	PIN, ROLL, .250 X 1.00 SST	1	35
16	CK-145	LEVER, CLINCHER, ROCKER	1	35
17	CK-147	ROD, CLINCHER, REAR	1	35
18	CKK-137	STAND W/MT.	1	35
19	CKK-193	CLAMP, ASSEMBLY	1	35
20	CBB-283-J	CORD, POWER (115 V.A.C.)	1	35
	CBB-283-S	CORD, POWER (230 V.A.C.)	1	35
21	CK-151	BRACKET, TABLE AND CLINCHER	1	35
22	D-41440-F	SCREW, .25-28 x .375 SOC. HD. CAP	4	35
23	CB-806	WASHER, FLAT, .250	2	35
24	CK-157	ROD, TRIP, PAPER	1	35
25	CK-136	ROD, LOCATING TRIP	1	35
26	CK-180-C	SPRING, TORSION	1	35
27	CB-284-A	PIN, DOWEL, .1875 X .75	1	35
28	CB-401	SCREW 8-32 X .375 RD. HD.	10	35,36
29	D-25947-F	SCREW, .375-16 X .75 HEX HD.	4	35
30	CK-168	DISC, CLAMP	1	35
31	CP-3-A	BUMPER, POLYLASTOMER	4	35
32	CG-162-B	BUSHING, STRAIN RELIEF	1	35
33	CK-180	SPRING, COMP., CONICAL	2	35,36
34	CKK-193-C	KNOB ASSEMBLY	1	35
35	CB-837-L	RING, RETAINING	1	35
36	CB-835-K2	PIN, ROLL, .093 x .437 LG.	1	35
37	CA-114-A	WASHER, FLAT, .625 ID x 1.5 OD x .04	2	35,36
38	CK-230	WASHER, .562 ID, .75 OD x .030 FLAT	1	37
39	CG-14-A	SCREW, 4-40 x .50 RD. HD.	2	37
40	CK-182	BRACKET, CIRCUIT BOARD	1	35
41	CK-162	BOARD, CIRCUIT (115 V.A.C.)	1	35
	CK-162-A	BOARD, CIRCUIT (230 V.A.C.)	1	35
42	CB-206	SCREW, 8-32 x .375 FL. HD.	4	35,37
43	CK-183	SUPPORT, PC BOARD	4	35
44	CK-174	COVER	1	35
45	CK-176	COTTER, HAIRPIN	1	35
46	CK-170	GLIDE, LEVER, TRIP	1	35
47	CA-9077	SCREW, 6-32 UNC 2B x .500 SET	1	35
48	CK-156	WASHER, ECCENTRIC	1	35
49	CB-835-J2	PIN, ROLL, .093 X .562, SST	1	35
50	CA-5108-B	SPRING, COMP.	1	35
51	CK-175	PIN, TRIP LEVER	1	35
52	CB-434-A	BUMPER, TRIP	2	35
53	D-31028-F	SCREW, 6-32 X .25 SET	3	35,37
54	CK-193-B	KNOB, TRIP LEVER	1	35
55	CB-835-T	PIN, ROLL, .062 x .312	2	35,37
56	CA-45-B	STUD, SPOOL WIRE	1	36
57	CA-139	SPOOL RETAINER	1	36
58	CB-56-R	SCREW, 4-40 x .75 SOC. HD. CAP	2	36
59	CB-1070-A	SCREW, 10-32 x .375 HEX HD.	3	36
60	CK-149	CAM	1	36
61	CK-180-A	SPRING, EXTENSION	1	36
62	D-30610-F	PIN, ROLL, .187 x .625 LG.	1	36
63	CK-146	CLEVIS	1	36
64	CK-153	TABLE, AUXILIARY	1	36
65	CK-166	BRACKET, GLIDE, REAR	1	36
66	CB-56-S	SCREW, 5-40 x .50 SOC. HD, CAP	2	36
67	CB-720	NUT, 6-32 HEX	2	36
68	CK-178	SCREW, 6-32 x 1.00 SET	1	36
69	CBB-283-K	WIRE ASSEM., TRIGGER/FT. JACK	1	36
70	CK-144	LEVER, CLINCHER OPERATING	1	36
71	CB-102-A	NUT, .312-18 UNC 2B HEX	1	36
72	CK-181	WASHER, .390 ID x .625 OD x .062	7	36
73	CB-1421-G	SHOULDER SCR., .375 DIA. x .75 LG.	1	36
74	CG-17	SPACER, LIMIT SWITCH	3	36
75	CG-15	SWITCH, LIMIT	2	36,37
76	CK-143	BRACKET, SWITCH, CAM	1	36
77	CG-190-A	PHONE JACK, .097 DIA.	2	36
78	CK-164-A	WASHER, SWEDGED FIBRE, .097 DIA.	2	36
79	CK-164-C	WASHER, FLAT PHENOLIC, .097 DIA.	2	36
80	CK-167	PANEL, CONTROL, REAR (115 V.A.C.)	1	36
	CK-167-B	PANEL, CONTROL, REAR (230 V.A.C.)	1	36
81	CG-190-B	PHONE JACK, .141 DIA.	1	36
82	CK-164	WASHER, SWEDGED FIBRE, .141 DIA.	1	36
83	CK-164-B	WASHER, FLAT PHENOLIC, .141 DIA.	1	36
84	CB-206-B	SCREW, 8-32 x .625 FL. HD.	4	36,37
85	CK-163	CIRCUIT BRKR ASSEM. (115 V.A.C.)	1	36
	CK-163-A	CIRCUIT BRKR ASSEM. (230 V.A.C.)	1	36
86	CB-55-F	SCREW, 4-40 x .375 FL. HD.	3	36
88	CK-135	PLATE, MOTOR, MTG.	1	37
89	CB-587	SCREW, .250-20 x .75 FL. HD.	4	37
90	CB-56-P	SCREW, 5-40 x .75 SOC. HD	8	37
91	CK-172	BRACKET, SWITCH, ON-OFF	1	37
92	CB-2 8 5-P2	SWITCH, ON-OFF ILLUM. (115 V.A.C.)	1	37
	CB-2 8 5-S2	SWITCH, ON-OFF ILLUM. (230 V.A.C.)	1	37
93	CB-287-B	SCREW, 6-32 X .312 RD. HD.	8	37
94	CK-165	BRACKET, GLIDE, FRONT	1	37
95	CB-835-Y	PIN, .250 x 1.50 SST	1	37
96	CB-1421-E	SCREW, SHOULDER	2	37
97	CB-561	SCREW, 10-32 x .50 SOC. HD. CAP	2	37
98	CTT-9086	CLINCHER PLATE ASSEMBLY	1	37
99	CA-2095-J	CLINCHER SLIDE	1	37
100	CK-160	GUIDE, PAPER L.H.	1	37
101	CK-161	GUIDE, PAPER R.H.	1	37
102	CA-9085-H	BRACE, SLIDE, CLINCHER	1	37
103	CA-9083	CLINCHER POINTS	2	37
104	CK-155	TRIP, LEVER, PAPER	1	37
105	CK-179	PLATE, RETAINER	1	37
106	CTT-9002	BONNET CLAMP ASSEMBLY	1	37
107	CB-619	SCREW, .250-20 x 1 FL. HD.	2	37
108	CK-134	BASE	1	37
109	CK-190	BRACKET, SW., SAFETY	1	37
110	CK-192	PIN, PIVOT, BLOCK	2	37
111	CK-191	BLOCK, PIVOT, GUARD	1	37
112	CF-1989	WASHER, #6 FLAT	2	37
113	CK-186	SPRING/SUPPORT, GUARD	1	37
114	CK-187	GUARD, FRONT	1	37
115	CB-1262	WASHER, #10, FLAT	2	37
116	CA-9067-B	NUT, ECCENTRIC, WIRE STR.	2	37
117	CK-189	BOLT, 10-24 x .50 CARRIAGE	2	37
118	CK-188	GUARD, SLIDING, FRONT	1	37
119	CB-2095-D	GUARD, FOOTSWITCH	1	37
120	CB-502-M	FOOT SWITCH	1	37
121	CK-177	SCREW, NO. 4 THR'D. FORMING	2	37
122	CBB-502-M	FOOTSWITCH ASSEMBLY	1	37
123	CK-196	GUIDE, PAPER	1	35
124	CG-14	SCREW, 4-40 X .250 RD. HD.	4	35
125	CK-198	BRACKET, PAPER, GUIDE	1	35
126	CK-229	GUIDE, GUARD	2	37
127	CKK-234	RESISTOR ASSEMBLY	1	35
128	D-38063-F	PIN, ROLL .125 x .625	1	35

OB olmedo badía
Olmedo Badía
www.olmedobadia.com
info@olmedobadia.com
Tel. 55-5557-0397

NOTES

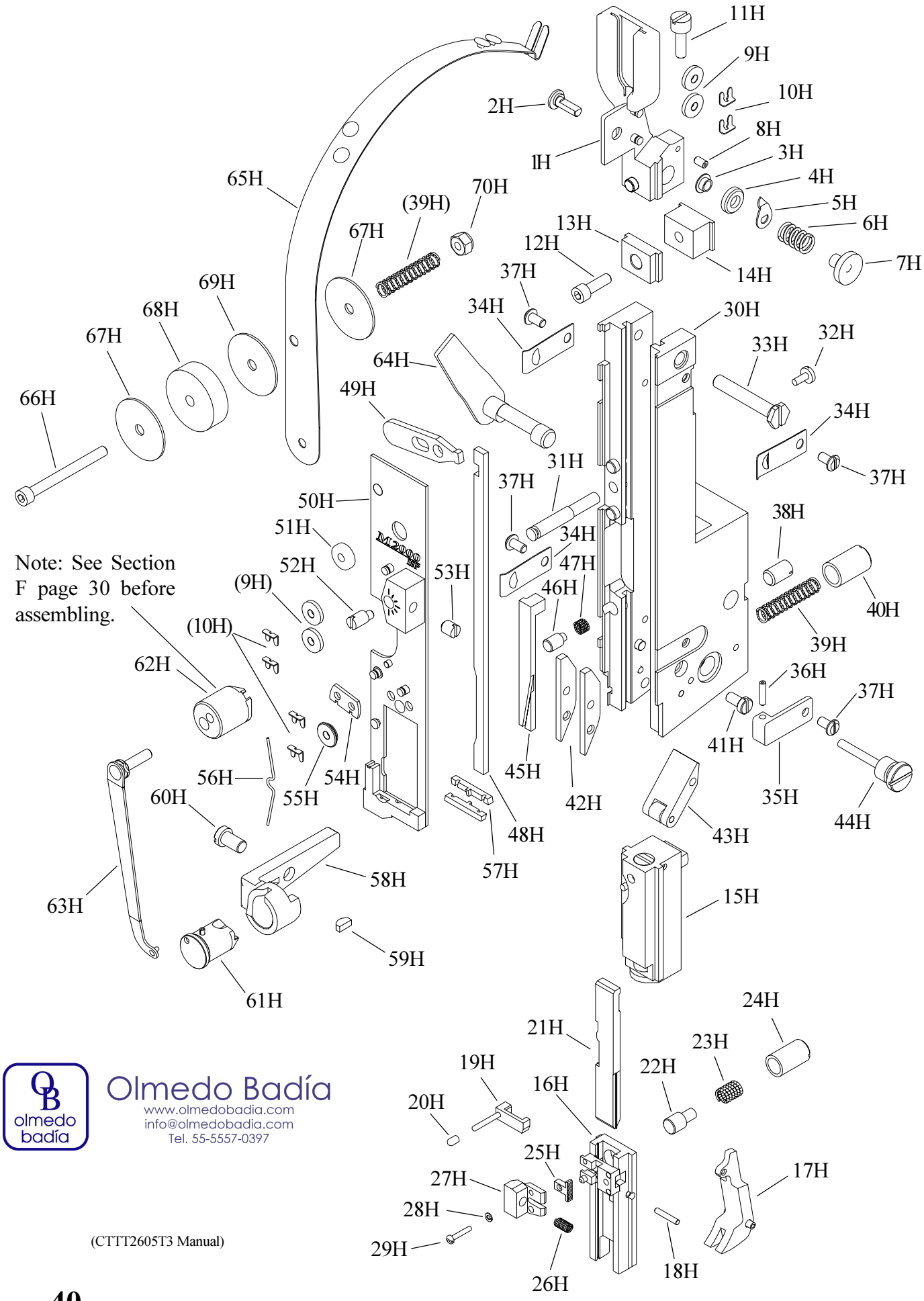

Olmedo Badía
www.olmedobadia.com
info@olmedobadia.com
Tel. 55-5557-0397

(CTTT2605T3 Manual)

M2000 HEAD

PARTS LIST

The following parts listing (from index numbers 1H through 70H) is for the Bindery Mate's M2000 Head, CTTT-2605-T3.

ITEM	PART NO.	DESCRIPTION	QTY
1H	CAAA9074A2	WIRE GUIDE BRACKET ASSEMBLY	1
		NOTE: The above Wire Guide Bracket Assembly includes the following items through item 11H:	
1H	CAA9074A2	WIRE GUIDE BRACKET SUB-ASSEMBLY	1
2H	CA9146A	ECCENTRIC SCREW	1
3H	CA9068	ECCENTRIC FRICTION BUSHING	1
4H	CA9065	ECCENTRIC ROLL	1
5H	CA9070	ECCENTRIC POINTER	1
6H	CA9069	ECCENTRIC SPRING	1
7H	CA9067	ECCENTRIC NUT	1
8H	D31028F	SET SCREW	1
9H	CA9103C	WIRE STRAIGHTENER ROLL	2
10H	CA9124	TENSION ROLL CLIP	2
11H	CA9076	WIRE GUIDE SPRING BRKT ADJ SCREW	1
12H	CB77	FACE PLATE LOCATING BLOCK SCREW	1
13H	CT2606	FACE PLATE LOCATING CLAMP	1
14H	CT2607	FACE PLATE LOCATING BLOCK	1
15H	CAA2623C	DRIVING SLIDE ASSEMBLY	1
		NOTE: The above assembly includes the following parts:	
	CA2623B	DRIVING SLIDE (ONLY)	
	CA2007A	DRIVING SLIDE SPRING PLUNGER	
	CA9006A	DRIVING SLIDE SPRING	
	D37327F	DRIVING SLIDE SPRING PIN	
	CA9028	DRIVING SLIDE ROTATOR OPERATING PIN	
16H	CAAA9013Z2	BENDER BAR ASS'Y COMPLETE 1/2" CROWN #25 TO #30 RD. WIRE	1
		NOTE: The above Bender Bar Assembly includes the following items through item 29H	
16H	CAA9013U	BENDER BAR SUB ASSEMBLY 1/2" CROWN #25 TO #30 RD. WIRE	
17H	CAA9026	SUPPORTER ASSEMBLY 1/2" CROWN	1
18H	CA9029	SUPPORTER PIVOT PIN	1
19H	CAA9014J	BENDER BAR LATCH ASSEMBLY	1
20H	CA173	PLASTIC CAP	1
21H	CA9012M	DRIVER BAR ASSEMBLY 1/2" CROWN	1
22H	CA9112A	BENDER BAR FRICTION PLUG	1
23H	CA9113A	BENDER BAR FRICTION PLUG SPRING	1
24H	CA9115	BENDER BAR FRICTION BUSHING	1
25H	CA9015D	GRIP	1
26H	CA168	GRIP SPRING	1
27H	CT413A	SPRING HOUSING	1
28H	CB371K	LOCKWASHER	1
29H	CA9024A	GRIP RETAINING CLIP SCREW	1
30H	CTT2604N	BONNET CASTING SUB ASSEMBLY	1
31H	CA9127	ROTATOR OPERATING CAM STUD	1
32H	CA9058	ROTATOR OPERATINGCAM STUD SCREW	1
33H	CA9075	WIRE GUIDE BRACKET SCREW	1
34H	CA9056C	FACE PLATE RETAINING CLIP	3
35H	CA9056D	FACE PLATE RETAINING CLIP	1
36H	CK213	SCREW, 4-40 X.500 SOC. HD. SET	1
37H	CA2081	FACE PLATE RETAINING CLIP SCREW	4
38H	CT9109	BONNET ALIGNMENT SCREW	1
39H	CA9032C	SUPPORTER SPRING	1
40H	CA9037	SUPPORTER SPRING BUSHING	1
41H	CA9081	SUPPORTER GUIDE PLATE SCREW	2
42H	CA9030	SUPPORTER GUIDE PLATE	2

ITEM	PART NO.	DESCRIPTION	QTY
43H	CAA9036B	SUPPORTER SPRING LEVER	1
44H	CA9034	SUPPORTER SPRING LEVER SCREW	1
45H	CA9049A	WIRE CUTTER OPERATING SLIDE 1/2" CR.	1
46H	CA9050A	WIRE CUTTER OP. SLIDE FRICTION PLUG	1
47H	CA9051A	WIRE CUTTER OP. SLIDE FRICTION PLUG SPRING	1
48H	CA9022J	GRIP RELEASE SLIDE 1/2" CROWN	1
49H	CA9025F	FACE PLATE ADJUSTING LEVER	1
50H	CAAA2132W	FACE PLATE ASSY. 1/2" CROWN #22 TO #30 RD. WIRE	1
		NOTE:The above Face Plate Assembly includes the following items through item 56H	
(9H)	CA9103C	WIRE STRAIGHTENER ROLL	2
(10H)	CA9124	TENSION ROLL CLIP	4
50H	CAA2132W	FACE PLATE SUB ASSY. 1/2" CROWN #22 TO #30 RD. WIRE	1
51H	CA9065A	WIRE STRAIGHTENER ECCENTRIC ROLL	1
52H	CA9066A	WIRE STRAIGHTENER ECCENTRIC	1
53H	CA172	ECCENTRIC FRICTION LOCKING SCREW	1
54H	CA9098	TENSION PAWL	1
55H	CA9103A	CHECK PAWL ROLLER	1
56H	CA9134	TENSION PAWL SPRING	1
57H	CA9048	WIRE CUTTER	2
58H	CA9043M	ROTATOR HOLDER #25 TO #30 RD. WIRE	1
59H	CB75B	KEY, WOODRUFF	1
60H	CA9044A	ROTATOR HOLDER SCREW	1
61H	CAA9038E	ROTATOR ASSEMBLY COMPLETE, 1/2" CR.	1
62H	CA9163C	ROTATOR OPERATING CAM	1
63H	CAA9046D	ROTATOR OPERATING SPRING ASSEMBLY	1
64H	CTT9003D	BONNET CLAMP ECCENTRIC	1
65H	CTTT2133C2	WIRE GUIDE ASSEMBLY	1
		NOTE: The above Wire Guide Assembly includes the following items through item 70H:	
(39H)	CA9032C	SUPPORTER SPRING	1
65H	CTT2133C2	WIRE GUIDE SUB-ASSEMBLY	1
66H	CB651E	SCREW	1
67H	CA9651	WASHER	2
68H	CA9652	FELT WASHER, THICK	1
69H	CA9653	FELT WASHER, THIN	1
70H	CB860B	NUT	1

OB olmedo badía
Olmedo Badía
www.olmedobadia.com
info@olmedobadia.com
Tel. 55-5557-0397

ELECTRICAL SCHEMATIC 115 V.A.C.

(SK828)

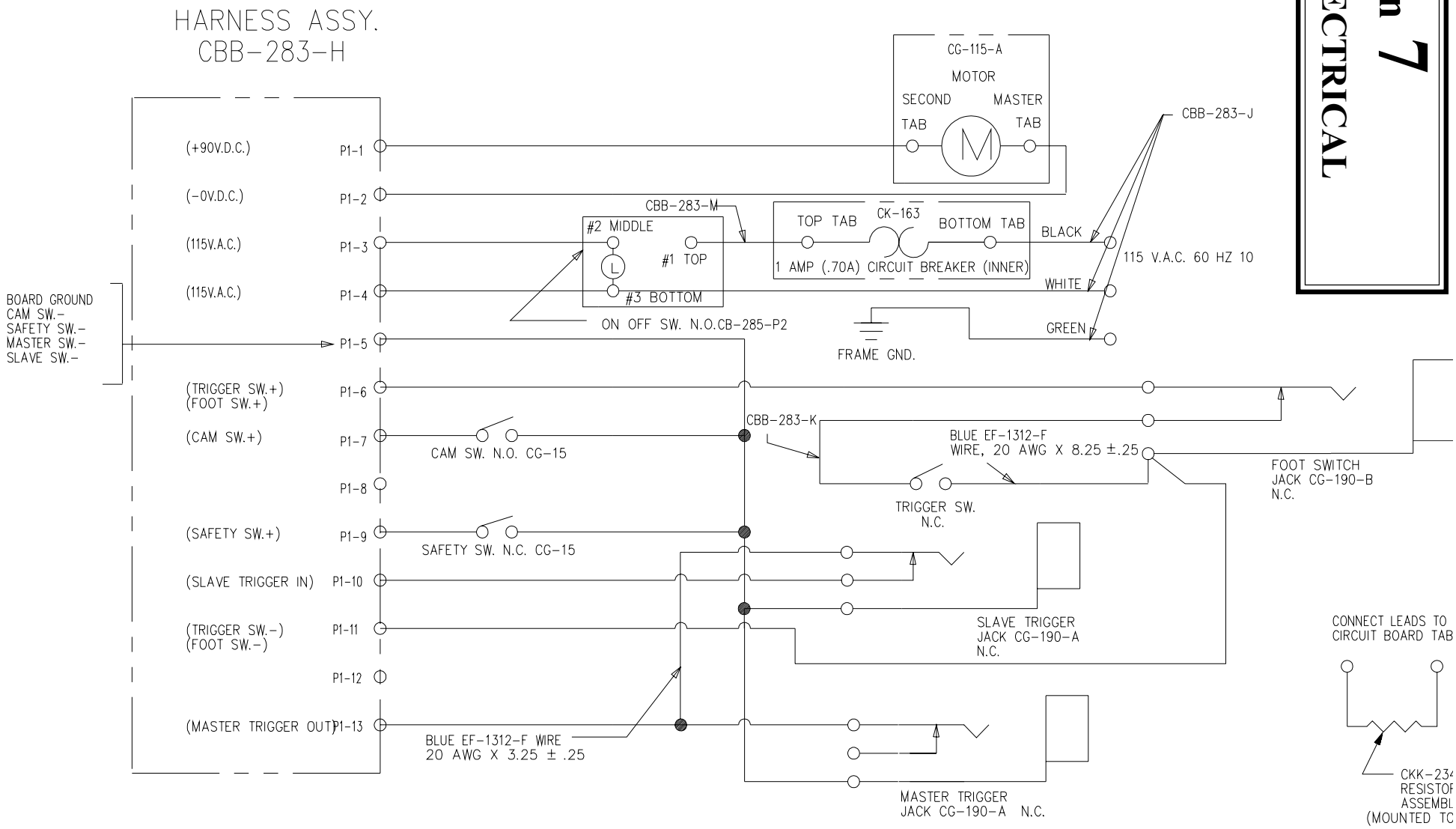

olmedo badía
Olmedo Badía
www.olmedobadia.com
info@olmedobadia.com
Tel. 55-5557-0397

ELECTRICAL SCHEMATIC 230 V.A.C.

(SK828B)

Olmedo Badía
www.olmedobadia.com
info@olmedobadia.com
Tel. 55-5557-0397

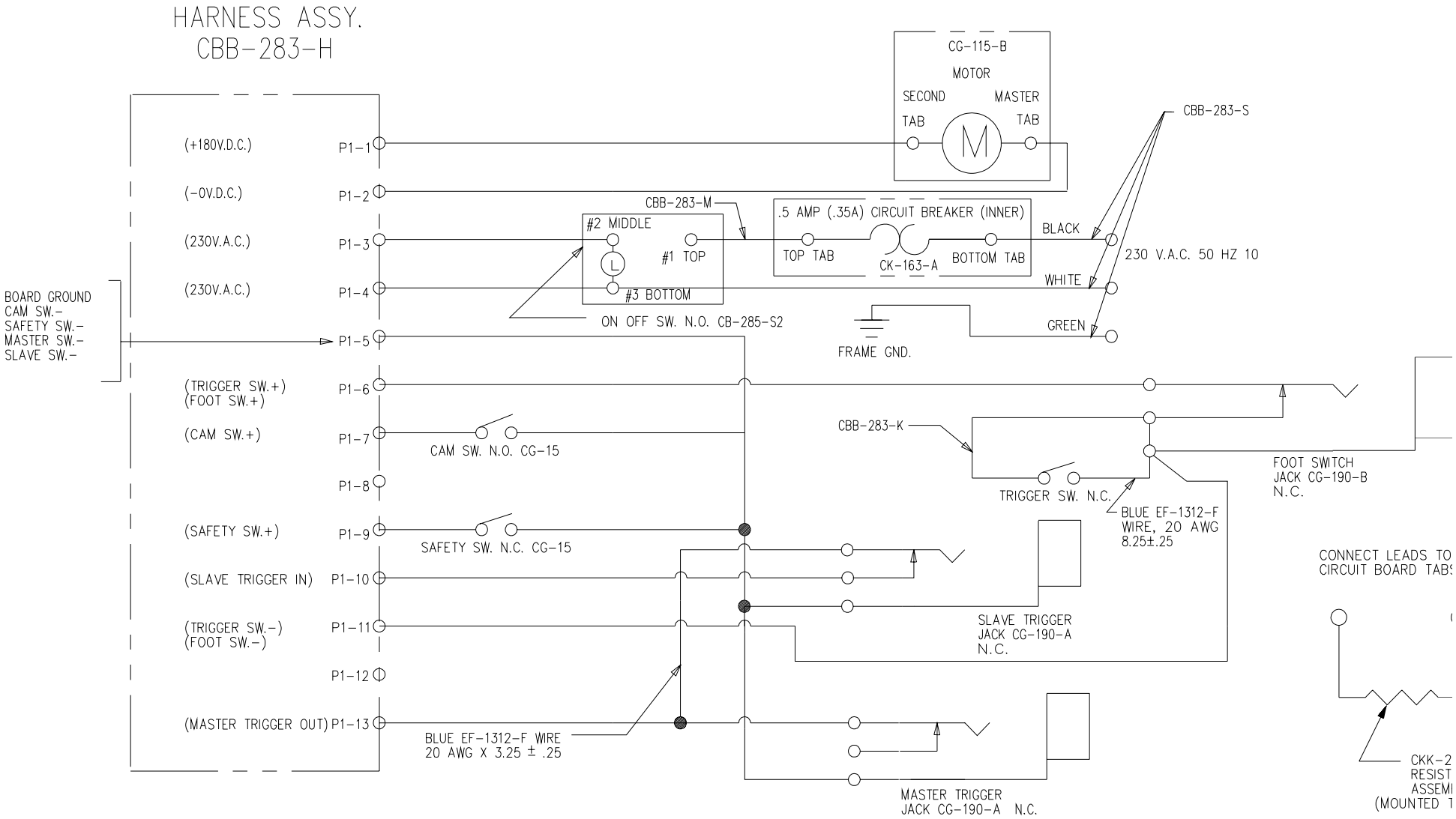

BINDERY MATE

WHEN ORDERING PARTS, PLEASE STATE: QUANTITY REQUIRED, PART NUMBER, PART NAME, WIRE SIZE AND CROWN WIDTH OF YOUR STITCHER.

ISP Stitching & Bindery Products

A Division Of Samuel Strapping Systems

USA:
3911 S. Memorial Dr. Racine, WI 53403
1-800-345-6641 1-262-589-5421
Fax: 1-262-598-5426
www.ispstitching.com

Olmedo Badía
www.olmedobadia.com
info@olmedobadia.com
Tel. 55-5557-0397

FORM QF27D 7-9-02